ICOM

SERVICE MANUAL

VHF AIR BAND TRANSCEVER

IC-A24
IC-A24E
IC-A6
IC-A6E

S-14115HZ-C1-①
July. 2007

Icom Inc.

INTRODUCTION

This service manual describes the latest service information for the **IC-A24/E** and **IC-A6/A6E** VHF AIR BAND TRANSCEIVER at the time of publication.

MODEL	VERSION	WX RX	VOR
IC-A24	[USA]	Yes	Yes
	[USA-1]		
	[USA-2]		
	[GEN]		
	[CHN]	Yes	
IC-A24E	[EUR]	No	
	[UK]	No	
IC-A6	[USA]	Yes	No
	[USA-1]		
	[USA-2]		
	[GEN]		
	[AUS]	No	
IC-A6E	[EUR]	No	
	[UK]		

To upgrade quality, any electrical or mechanical parts and internal circuits are subject to change without notice or obligation.

CAUTION

NEVER connect the transceiver to an AC outlet or to a DC power supply that uses more than specified. This will ruin the transceiver.

DO NOT expose the transceiver to rain, snow or any liquids.

DO NOT reverse the polarities of the power supply when connecting the transceiver.

DO NOT apply an RF signal of more than 20 dBm (100 mW) to the antenna connector. This could damage the transceiver's front-end.

ORDERING PARTS

Be sure to include the following four points when ordering replacement parts:

1. 10-digit Icom parts numbers
2. Component name
3. Equipment model name and unit name
4. Quantity required

<ORDER EXAMPLE>

1110003491	S.IC	TA31136FNG	IC-A24	RF UNIT	5 pieces
8820001210	Screw	2438 screw	IC-A24	Top cover	10 pieces

Addresses are provided on the inside back cover for your convenience.

REPAIR NOTES

1. Make sure the problem is internal before disassembling the transceiver.
2. **DO NOT** open the transceiver until the transceiver is disconnected from its power source.
3. **DO NOT** force any of the variable components. Turn them slowly and smoothly.
4. **DO NOT** short any circuits or electronic parts. An insulated tuning tool **MUST** be used for all adjustments.
5. **DO NOT** keep power ON for a long time when the transceiver is defective.
6. **DO NOT** transmit power into a Standard Signal Generator or a Sweep Generator.
7. **ALWAYS** connect a 50 dB to 60 dB attenuator between the transceiver and a Deviation Meter or Spectrum Analyzer when using such test equipment.
8. **READ** the instructions of test equipment throughly before connecting a test equipment to the transceiver.

Icom, Icom Inc. and ICOM logo are registered trademarks of Icom Incorporated (Japan) in the United States, the United Kingdom, Germany, France, Spain, Russia and/or other countries.

TABLE OF CONTENTS

SECTION 1 SPECIFICATIONS

SECTION 2 INSIDE VIEWS

SECTION 4 CIRCUIT DESCRIPTION

4 - 1 RECEIVER CIRCUITS . . . . . 4 - 1

4 - 2 TRANSMITTER CIRCUITS . . . . . 4 - 2

4 - 3 PLL CIRCUIT . . . . . 4 - 3

4 - 4 POWER SUPPLY CIRCUITS . . . . . 4 - 4

4 - 5 CPU PORT ALLOCATIONS . . . . . 4 - 5

SECTION 5 ADJUSTMENT PROCEDURES

5 - 1 PREPARIOTION . . . . . 5 - 1

5 - 2 SOFT WEAR ADJUSTMENT . . . . . 5 - 3

SECTION 6 PARTS LIST

SECTION 7 MECHANICAL PARTS AND DISASSEMBLY

SECTION 8 SEMI-CONDUCTOR INFORMATION

SECTION 9 BOARD LAYOUTS

9 - 1 LOGIC UNIT . . . . . 9 - 1

9 - 2 RF UNIT . . . . . 9 - 3

SECTION 10 BLOCK DIAGRAM

SECTION 11 VOLTAGE DIAGRAMS

11 - 1 LOGIC UNIT . . . . . 11 - 1

11 - 2 RF UNIT . . . . . 11 - 2

SECTION 1 SPECIFICATIONS

■ GENERAL

• Frequency coverage	: TX 118.000–136.975 MHz	
	RX 108.000–136.975 MHz	[IC-A24/E]
	118.000–136.975 MHz	[IC-A6/E]
	WX 161.650–163.275 MHz	[USA] only
• Type of emission	: 6K00A3E, 16K0G3E (Weather channel; [USA] only)	
• Channel spacing	: 25 kHz	
• Number of memory channels	: 20 channels × 10 banks	
• Power supply requirement	: Specified ICOM's battery packs (BP-208N, BP-209N, BP-210N, BP-211N)	
• External power supply requirement	: 11.0 V DC	
• Current drain (at 7.2 V DC)	: Transmit 1.5 A typical	
	Receive 300 mA typical (AF max.)	
	70 mA typical (Stand-by)	
• Operating temperature range	: –10°C to +60°C; +14°F to +140°F	[GEN], [USA], [CHN]
	–20°C to +55°C	[EUR]
	–10°C to +50°C	[AUS]
• Frequency stability	: ±5 ppm	
• Antenna connector	: BNC type (50 Ω nominal)	
• Dimensions (projections not included)	: 129.3(W) × 54(H) × 35.5(D) mm; 5 3/32(W) × 2 1/8(H) × 1 13/32(D) in	
• Weight (antenna, battery pack not included)	: 180 g; 6 11/32 oz (Approx.)	

■ TRANSMITTER

• RF output power (at 7.2 V DC)	: 5.0 W (PEP) typical, 1.5 W (CW) typical	[GEN], [USA], [CHN]
	3.6 W (PEP) typical, 1.0 W (CW) typical	[EUR], [AUS]
• Modulation system	: Low level modulation	
• Modulation limiting	: 70–100%	[GEN], [USA], [CHN]
• Modulation depth	: 85%	[EUR]
	85% to 95%	[AUS]
• Audio harmonic distortion	: Less than 10% (at 60% modulation)	[GEN], [USA], [CHN]
	Less than 10% (at 85%±3 dB modulation)	[EUR]
• Hum and noise ratio	: More than 35 dB	[GEN], [USA], [CHN]
• Spurious emissions (except operating frequency ±62.5 kHz range)	: More than 46 dB	[GEN], [USA], [CHN]
• Harmonic spurious emissions (except operating frequency ±1 MHz range)	: Less than –36 dBm	[EUR]
	Less than –26 dBm	[AUS]
• Microphone connector impedance	: More than 100 kΩ (3-conductor 2.5(d) mm (1/10"))	

■ RECEIVER

• Receive system	: Double conversion superheterodyne	
• Intermediate frequencies	: 1st 30.05 MHz	
	2nd 450 kHz	
• Sensitivity	:	
VOR (AM 6 dB S/N)	0.71 µV typical	[IC-A24/E]
COM (AM 6 dB S/N)	0.5 µV typical	[GEN], [USA], [CHN]
COM (AM 12 dB SINAD with CCITT filter)	0.71 µV typical	[EUR], [AUS]
WX (FM 12 dB SINAD)	0.22 µV typical	[USA]
• Threshold squelch sensitivity	: Less than 1 µV (AM)	
	Less than 0.45 µV (FM for WX channel)	[USA]
• Selectivity	: More than 7.5 kHz/6 dB, Less than 25 kHz/60 dB	except [AUS]
	More than 60dB	[AUS]
• Spurious response rejection ratio	: More than 60 dB (AM), More than 30 dB (FM)	[GEN], [USA], [CHN]
	More than 70 dB (AM)	[EUR]
	More than 60 dB (AM)	[AUS]
• Audio output power (at 7.2 V DC)	: 500 mW typical (at 10% distortion with an 8 Ω load, 30% modulation)	
• Hum and noise	: More than 40 dB at 30% modulation	[GEN], [USA], [CHN]
	More than 40 dB at 90% modulation	[EUR]
	More than 30 dB	[AUS]
• External speaker connecter	: 3-conductor 3.5(d) mm (1/8")/ 8 Ω	

Specifications are measured in accordance with FCC Part87 ([USA]], [GEN], [CHN]), EN300 676 ([EUR], [UK]) or AS/NZS 4583:1999 ([AUS])
All stated specifications are subject to change without notice or obligation.

• LOGIC UNIT

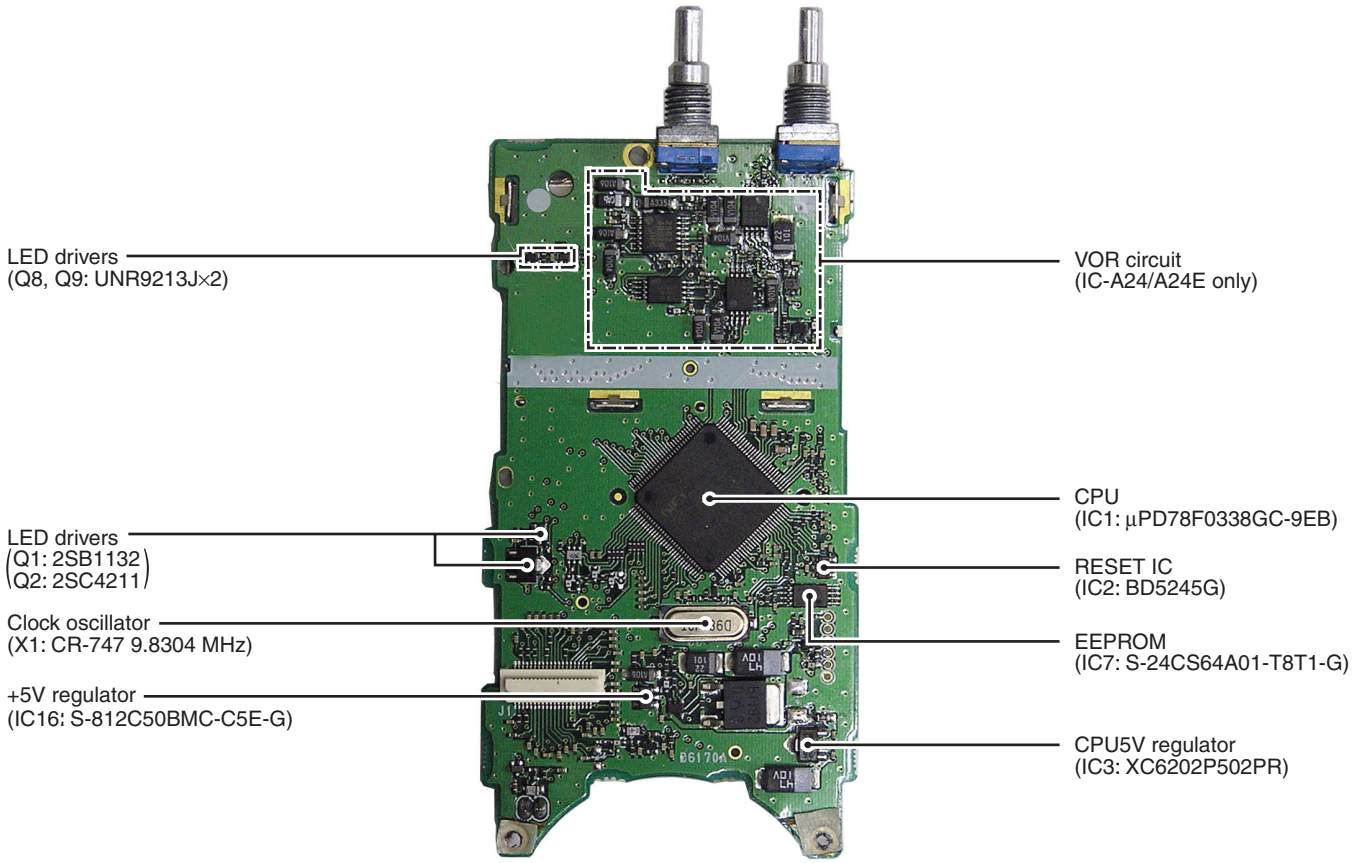

• RF UNIT (TOP VIEW)

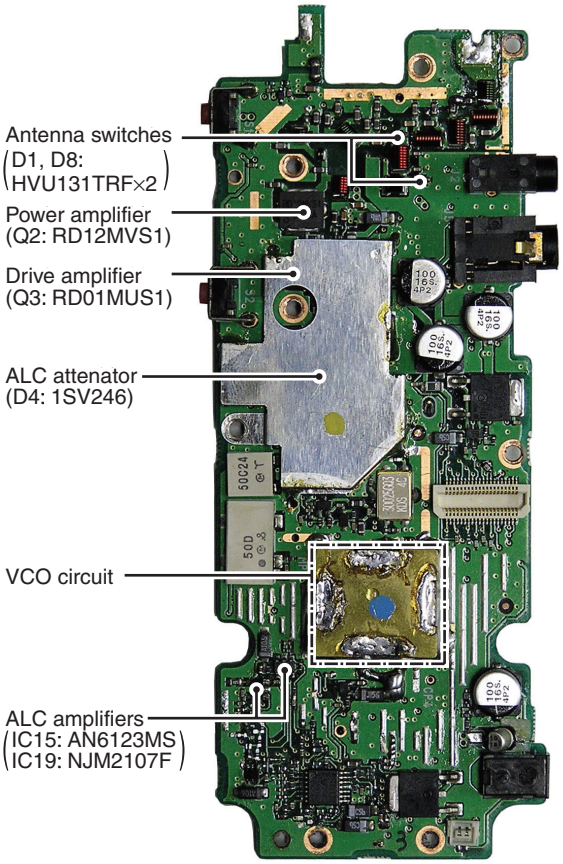

• RF UNIT (BOTTOM VIEW)

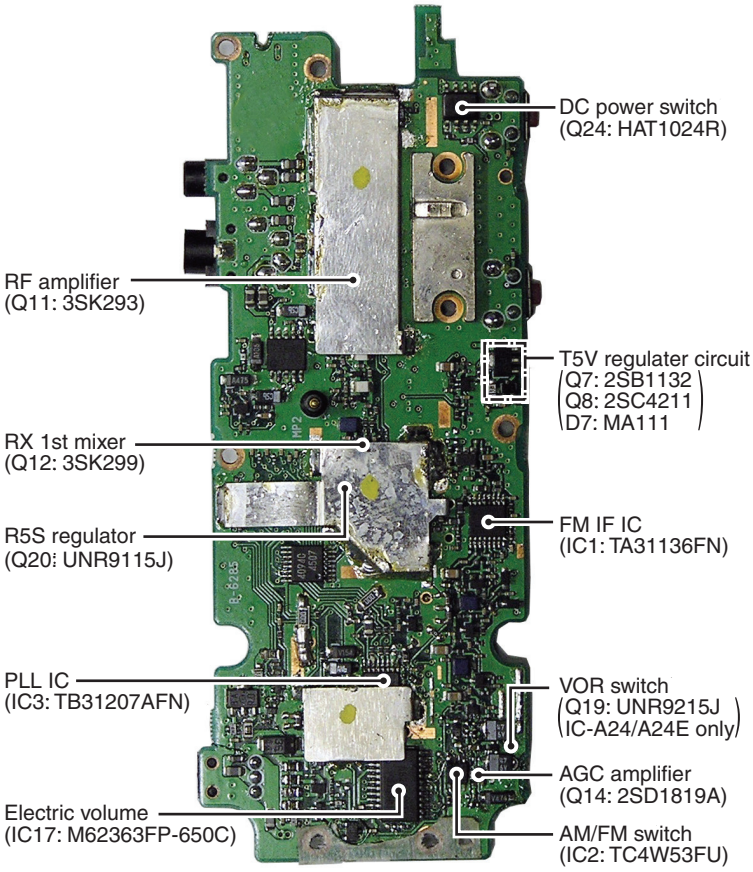

SECTION 3 DISASSEMBLY INSTRUCTION

• REMOVING THE CHASSIS PANEL

① Remove the Jack cap Ⓐ.
② Remove [VOL] knob Ⓑ and [DIAL] knob Ⓒ.
③ Unscrew the ANT nut Ⓓ.
④ Unscrew 3 screws Ⓔ.
⑤ Disconnect the connector Ⓕ from J4 and remove the LOGIC/RF unit from the Front panel.

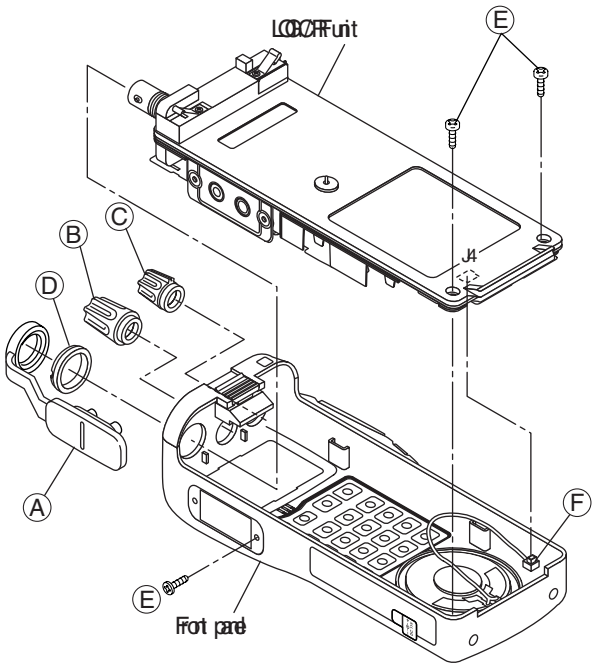

• REMOVING THE LOGIC UNIT

① Remove the main seal Ⓖ.

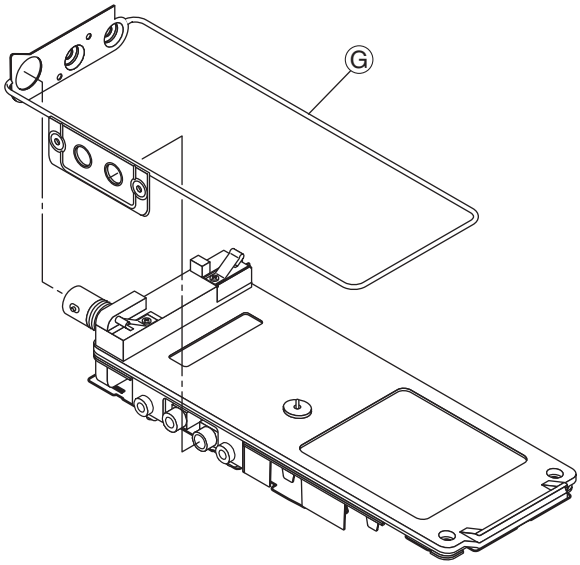

Continue to right above.

② Unsolder 1 point Ⓗ.
③ Unscrew 2 nuts Ⓘ.
④ Unscrew 3 screws Ⓙ and remove the LOGIC unit from the RF unit.

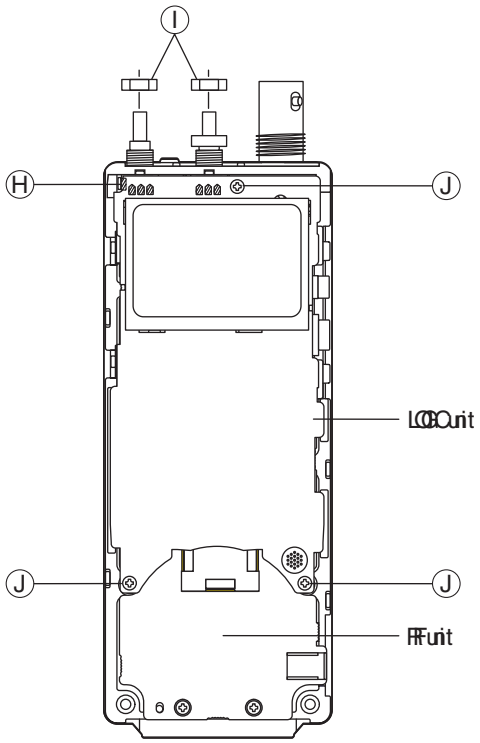

• REMOVING THE RF UNIT

① Unsolder 2 points Ⓚ.
② Unscrew 6 screws Ⓛ.
③ Unscrew 2 screws Ⓜ and remove the RF unit from the chassis unit.

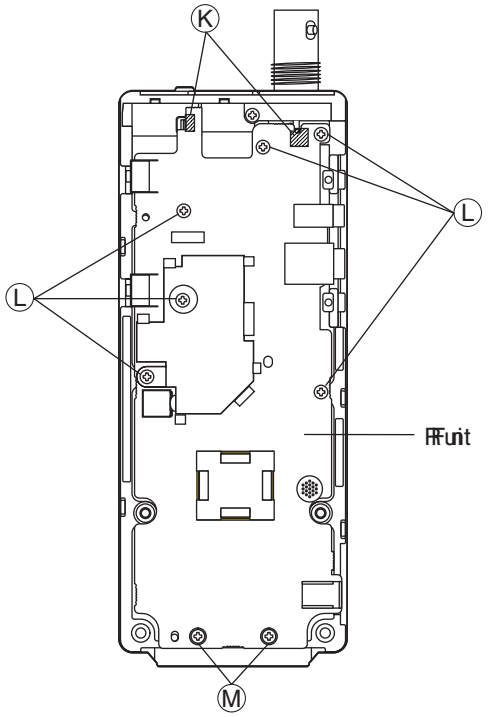

Be careful not to break and lost the sealing washer.

SECTION 4 CIRCUIT DESCRIPTION

4-1 RECEIVER CIRCUITS

4-1-1 ANTENNA SWITCHING CIRCUIT (RF UNIT)

The antenna switching circuit functions as a low-pass filter while receiving. However, its impedance becomes very high while D8 and D9 are turned ON. Thus transmit signals are blocked from entering the receiver circuits. The antenna switching circuit employs a λ/4 type diode switching system.

Received signals are passed through the low-pass filter (L1–L3, L45, C3–C7, C210, C211). The filtered signals are applied to the λ/4 type antenna switching circuit (D8, D9).

The passed signals are then applied to the RF amplifier circuit.

4-1-2 RF CIRCUIT (RF UNIT)

The RF circuit amplifies signals within the range of frequency coverage and filters out-of-band signals.

The signals from the antenna switching circuit are amplified at the RF amplifier (Q11) after passing through the tunable bandpass filter (D13, L18, L70, C58, C60). The amplified signals are applied to the 1st mixer circuit (Q12) after out-of-band signals are suppressed at the another tunable bandpass filter (D14–D16, D44, L22, L23, C70–C79).

Varactor diodes are employed at the bandpass filters (D13–D16, D44) that track the filters and are controlled by the CPU (LOGIC unit; IC1) via the expander IC (IC17) using bandpass filter control voltages (T1–T4). These diodes tune the center frequency of an RF passband for wide bandwidth receiving and good image response rejection.

4-1-3 1ST MIXER AND 1ST IF CIRCUITS (RF UNIT)

The 1st mixer circuit converts the received signal into a fixed frequency of the 1st IF signal with a PLL output frequency. By changing the PLL frequency, only the desired frequency will pass through a crystal filter at the next stage of the 1st mixer.

The signals from the RF circuit are mixed at the 1st mixer (Q12) with a 1st LO signal (AM; 77.95–106.925 MHz, FM; 131.6–133.225 MHz) coming from the VCO circuit to produce a 30.05 MHz 1st IF signal.

The 1st IF signal is applied to a crystal filter (FI1) to suppress out-of-band signals. The filtered 1st IF signal is applied to the 1st IF amplifier (Q13), then applied to the 2nd mixer circuit (IC1, pin 16).

4-1-4 2ND IF AND DEMODULATOR CIRCUITS (RF UNIT)

The 2nd mixer circuit converts the 1st IF signal into a 2nd IF signal. A double conversion superheterodyne system (which converts receive signals twice) improves the image rejection ratio and obtains stable receiver gain.

The IF IC contains the 2nd local oscillator, 2nd mixer, limiter amplifier, quadrature detector and s-meter detector circuit, etc.

The 1st IF signal from the 1st IF amplifier (Q13) is applied to the 2nd mixer section of the IF IC (IC1, pin 16), and is mixed with a 29.6 MHz 2nd LO signal generated at the PLL circuit using the reference frequency (29.6 MHz) to produce a 450 kHz 2nd IF signal.

The 2nd IF signal from the 2nd mixer (IC1, pin 3) passes through a ceramic filter (FI2) to remove unwanted heterodyned frequencies. The filtered signal is amplified at the IF amplifier (Q15), and is then applied to the AM detector circuit or FM detector circuit respectively.

(1) AM DETECTOR CIRCUIT

The amplified signal is amplified again at the 2nd IF amplifiers (Q16, Q17) and applied to the AM detector (Q18) to demodulate the 2nd IF signal into AF signals.

The demodulated AF signals are applied to the AM/FM switch (IC2, pin 6) via the ANL circuit (D18).

• RF AND IF CIRCUIT

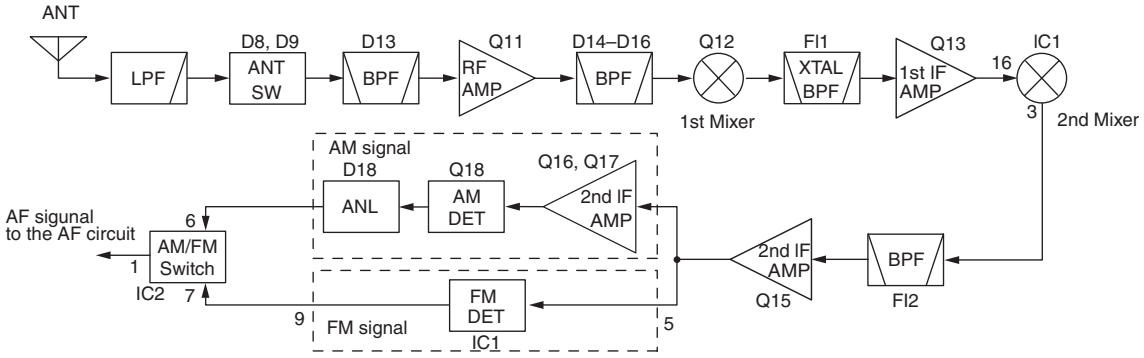

(2) FM DETECTOR CIRCUIT

The amplified signal is applied to the limiter amplifier section of the IF IC (IC1, pin 5) and is then applied to the quadrature detector (IC1, pins 10, 11) to demodulate the 2nd IF signal into AF signals.

The demodulated AF signals are output from pin 9 of the IC1 and are applied to the AM/FM switch (IC2, pin 7).

4-1-5 AF CIRCUIT (RF UNIT)

The AF amplifier circuit amplifies the demodulated AF signals to drive a speaker.

AF signals from the AM detector (Q18; While in AM mode) or IF IC (IC1, pin 9; While in FM mode) are applied to the AM/FM switch (IC2, pin 6 or 7). The output signals from pin 1 are applied to the AF amplifier (IC18, pins 1, 2), and then pass through the low-pass filter (IC18, pins 5, 7, 8, 10). The filtered signals are amplified at the OP-amplifier (IC18, pins 13, 14), and are then applied to the AF power amplifier (IC6, pin 4) to obtain the specified audio level after being passed through the electric volume (IC17, pins 21, 22). The amplified AF signals are applied to the internal speaker (SP1) via the [SP] jack (J5) when no plug is connected to the jack.

4-1-6 SQUELCH CIRCUIT (RF AND LOGIC UNITS)

A squelch circuit cuts out AF signals when no RF signals are received. By detecting noise components in the AF signals, the squelch switches the AF mute switch.

The AGC signal from the AGC amplifier (Q10) is amplified again at the RSSI amplifier (IC13) and is then applied to the CPU (LOGIC unit; IC1,pin 29) as the “RSSI” signal.

The CPU analyzes the noise condition and outputs the control signal to the expander IC (IC5). The expander IC (IC5, pin 4) outputs the squelch control signal as the “AFC” signal. The signal is applied to the AF out control circuit (Q36, Q35) to control the power amplifier (IC6) and cut the AF signal line.

4-1-7 AGC CIRCUIT (RF UNIT)

The AGC (Automatic Gain Control) circuit reduce signal fading and keeps the audio output level constant.

AF signals from the AM detector circuit (Q18) are applied to the AGC amplifier circuits (Q14; for 1st/2nd IF amplifiers, Q10; for RF amplifier, Q9; for RF attenuator). The signal from the AGC amplifiers is applied to the 1st/2nd IF amplifiers (Q13, Q15, Q16) and RF amplifier (Q11) to reduce the amplifier gain and RF attenuator (D29) to attenuate the RF signals when strong signals are received.

When strong RF signals disappear, then the AGC signal is released to keep the constant audio output level.

• AGC CIRCUIT

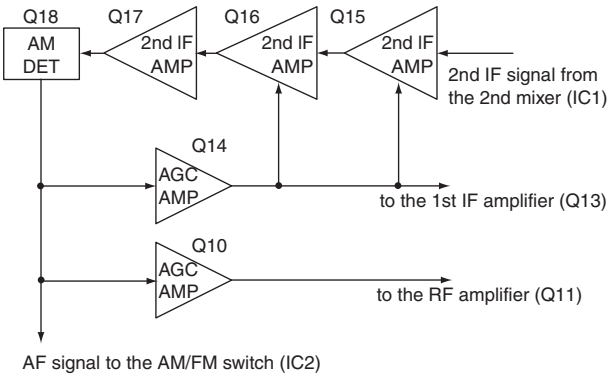

• 2ND IF AND DEMODULATOR CIRCUIT

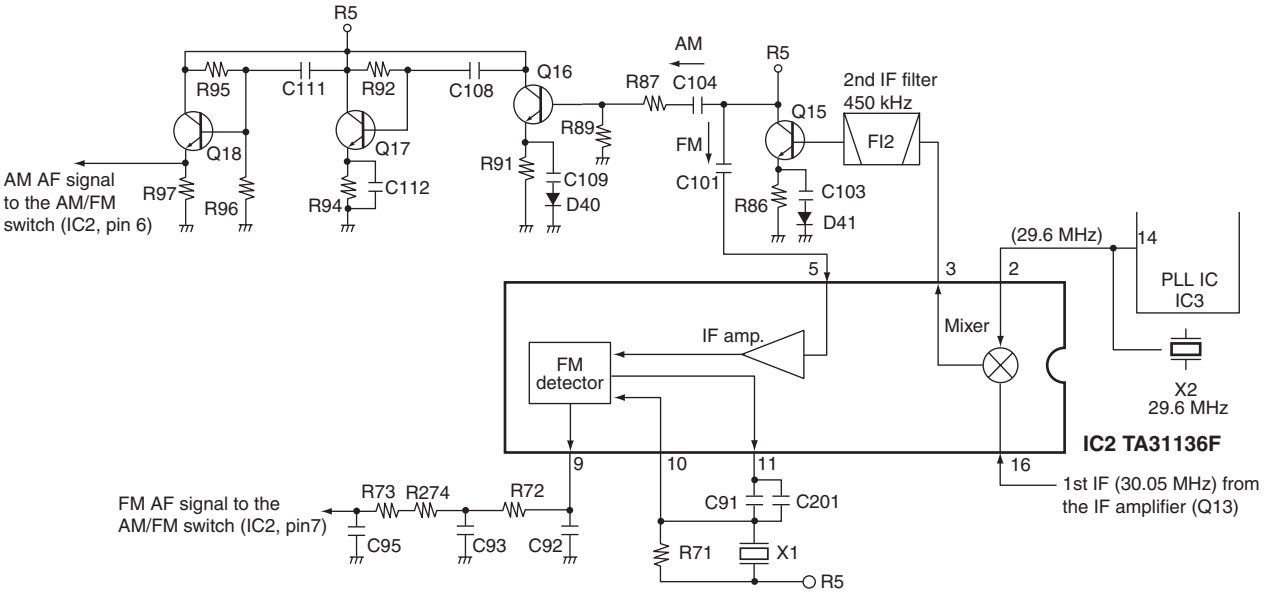

4-1-8 ANL CIRCUIT (RF UNIT)

The ANL (Automatic Noise Limiter) circuit (Q21, D18) reduces noise components.

The AM detector output signal from the Q18 is applied to the cathode of D18 passing through R99 where it is divided by R99 and R100. The signal is also applied to the anode of D18, passing through R101 and R102.

When the ANL function is activated (Q21 is ON), C115 is grounded. The detector output, including noise components, are applied to the cathode of D18 only. If noise components are received, the cathode voltage of D18 becomes higher than the anode voltage and D18 turns OFF. Thus, while noise components are received, the detected signal is not applied to IC2.

• ANL CIRCUIT

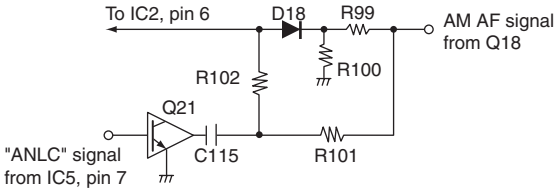

4-1-9 VOR NAVIGATION CIRCUIT (LOGIC UNIT) (IC-A24/E ONLY)

From the AF signal, the VOR circuit detects a variable signal (VORC) and reference signal (VORS) from a VOR station. The VOR circuit sends these signals to the CPU (IC1).

When the transceiver is set in the navigation band (108.000 –117.975 MHz), the VORON port of the CPU (IC1, pin 118) becomes “HIGH” turning the VOR circuit ON via Q15. Q15 controls a 5 V power source for the VOR circuit.

The signal from the AM detector (VORDET) is buffer amplified at the OP-AMP IC (IC12).

The “VORDET” signal includes 30 Hz variable phase components and 9960 Hz reference phase components.

The 30 Hz component passes through the 30 Hz bandpass filter (IC12, R83–R88, C112, C113), and is converted to a square-wave signal at the VORS comparator (IC14). The square-wave signal is then applied to the CPU (IC1, pin 2) as variable signal (VORS).

The 9960 Hz component passes through the 10 kHz bandpass filter (IC12, R79–R82, C108, C109). These components are FM modulated with 480 Hz deviation and 30 Hz modulation.

Signals are then amplified at a limiter amplifier (IC11), and detected at an FM detector (IC11) to obtain a 30 Hz reference signal.

The 30 Hz signal is compensated on phase at IC12. This signal is passed through the 30 Hz low-pass filter (IC12) and is converted to a square-wave signal at the VORC comparator (IC14). This signal is applied to the CPU (IC1, pin 3) as a reference signal (VORC).

A portion of output from the buffer amplifier (IC12) is applied to the amplifier (Q13). When VOR level is low or receiving the signal except VOR signal, output from IC12 is reduced. Output signal from Q13 is applied to the CPU (IC1, pin 28) as a “OFF FLAG” signal (VORD).

• VOR NAVIGATION CIRCUIT

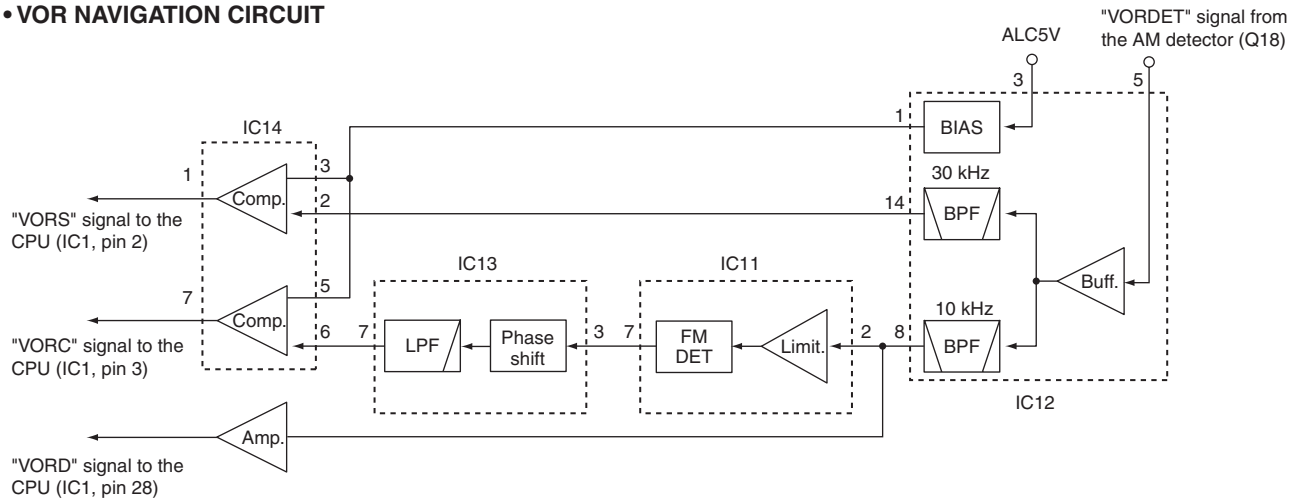

4-2 TRANSMITTER CIRCUITS

4-2-1 MICROPHONE AMPLIFIER CIRCUIT (RF UNIT)

The microphone amplifier circuit amplifies audio signals with +6 dB/octave pre-emphasis characteristics from the microphone to a level needed for the modulation circuit.

AF signal from the internal/external microphone are applied to the microphone amplifier (IC15, IC19) via the microphone mute switch (Q51) and the microphone volume controller (IC17; pins 15, 16). The amplified signals are applied to the AF controller (IC17, pins 13, 14, and are then applied to buffer amplifier (IC18, pins 1, 2). Amplified signals passes through the low-pass filters (IC18, pins 4, 5, 8, 10) and are then applied to the modulation circuit (D5, D51).

4-2-2 MODULATION CIRCUIT (RF UNIT)

The modulation circuit modulates the TX LO signal from the VCO (RF signal) using the microphone audio signal.

While in transmission, the LO signal from the VCO circuit (Q58, D38, D48) is amplified at the buffer amplifiers (Q28, Q60) and passed through the LO switch (D6). This signal is then applied to the AM modulator (D5, D51).

The buffer amplifier (Q6) amplifies the LO signal with a gain controlled by an AF signal to make low level modulation.

4-2-3 DRIVE/POWER AMPLIFIER CIRCUITS (RF UNIT)

The drive amplifier circuit amplifies the transmit signal to a level needed for the power amplifier circuit. The power amplifier circuit amplifies this to obtain a specified transmit output power.

The modulated RF signal from the buffer amplifier (Q6) is applied to the pre-drive amplifier (Q4) after being passed through the ALC attenuator (D4). The signal is amplified at the YGR (Q3) and power amplifier (Q2) to obtain 5 W (PEP) (3.6 W (PEP) for [EUR]) of RF power. The amplified signal passes through the low-pass filter (L6, L46, C22, C212, C297, C299). The filtered signal is applied to the antenna connector (CHASSIS unit; J1) via the power detector (D2, D3, L5), antenna switch (D1) and low-pass filter (L1–L3, L45, C3–C7, C210, C211).

4-2-4 ALC CIRCUIT (RF UNIT)

The ALC (Automatic Level Control) circuit controls the input level of the pre-drive amplifier to obtain stable output power.

The power detector circuit (D2, D3) detects transmit output power level. The detected voltage are combined and is then amplified at the ALC amplifier (Q5) after being passed through the ALC controller (Q1). The amplified signal is applied to the ALC attenuator (D4) to obtain stable output power.

• MODULATION CIRCUIT

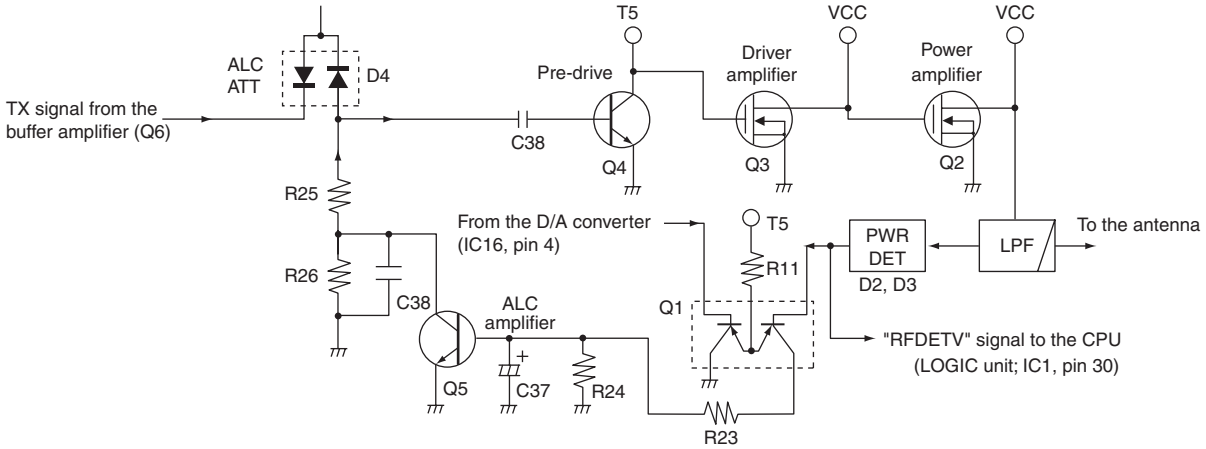

4-3 PLL CIRCUITS (RF UNIT)

A PLL circuit provides stable oscillation of the transmit frequency and receive 1st LO frequency. The PLL output compares the phase of the divided VCO frequency to the reference frequency. The PLL output frequency is controlled by the divided ratio (N-data) of a programmable divider.

The PLL circuit contains the TX VCO circuit (Q58, D38, D48) and RX VCO circuit (Q59, D39, D45–D47). The oscillated signal is amplified at the buffer-amplifiers (Q60, Q29) and then applied to the PLL IC (IC3, pin 8).

The PLL IC contains a prescaler, programmable counter, programmable divider and phase detector, etc. The entered signal is divided at the prescaler and programmable counter section by the N-data ratio from the CPU. The divided signal is detected on phase at the phase detector using the reference frequency.

If the oscillated signal drifts, its phase changes from that of the reference frequency, causing a lock voltage change to compensate for the drift in the oscillated frequency.

A portion of the VCO signal is amplified at the buffer-amplifier (Q28) and is then applied to the receive 1st mixer (Q12) or transmit buffer-amplifier circuit (Q6) via the T/R switches (D6, D17).

4-4 POWER SUPPLY CIRCUITS

VOLTAGE LINES (MAIN UNIT)

LINE	DESCRIPTION
HV	The voltage from the connected DC power supply.
VCC	The same voltage as the HV line or battery voltage through the power switch (Q24, D19, D22).
CPU 5	Common 5 V converted from the HV line at the CPU5V regulator circuit (LOGIC unit; IC3). The output voltage is applied to the CPU (LOGIC unit; IC1), reset IC (LOGIC unit; IC2) and EEPROM (LOGIC unit; IC7), etc.
+5V	Common 5 V converted from the VCC line by the +5 V regulator circuit (LOGIC unit; IC16, Q4, Q6, Q7, D10). The output voltage is applied to the PLL IC (RF unit; IC3) and D/A convertor IC (RF unit; IC17), etc.
T5V	Transmit 5 V controlled by the T5V regulator circuit (RF unit; Q7, Q8, D8) using TXC signal from the CPU (LOGIC unit; IC1). The output voltage is applied to the buffer amplifier (RF unit; Q6) and pre-driver (RF unit; Q4), etc.
R5S	Receive 5 V controlled by the R5S regulator circuit (Q20) using R5C signal from the CPU (LOGIC unit; IC1). The output voltage is applied to the RF amplifier (RF unit; Q12) and 1st IF amplifier (RF unit; Q13), etc.

• PLL CIRCUIT

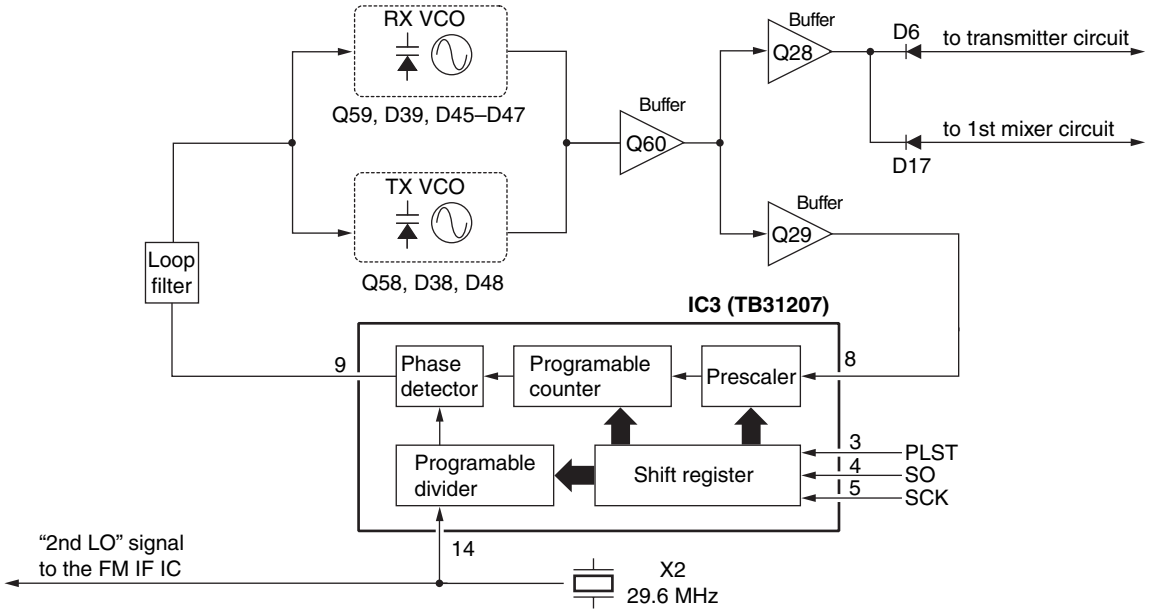

4-5 PORT ALLOCATIONS

4-5-1 CPU (LOGIC unit; IC1)

Pin number	Port name	Description
1	PCON	Outputs control signal for the 5 V regulator (IC16, Q4, Q6, Q7, D10).
2	VORS	Input port for the 30 Hz phase signal.
3	VORC	Input port for the VOR 30 Hz standard signal.
4	BPCPI	Outputs the bias control signal for a type of battery.
5	LIGHT	Input port for [LIGHT] switch.
6	CLIN	Input port for the cloning signal.
7	CLOUT	Outputs the cloning signal.
10	EDATA	I/O port for data signal from/to the EEPROM (LOGIC unit; IC7)
11	ECK	Outputs clock signal to the EEPROM IC (LOGIC unit; IC7).
12	POWER	Input port for [POWER] switch.
13	PTT	Input port for [PTT] switch. High: While [PTT] switch is pushed.
14	UNLK	Input port for the PLL unlock signal. Low: PLL is unlocked.
17	DCC	Input port for the external DC connection detection.
25	RESET	Input port for the CPU reset signal.
28	VORD	Input port for the VOR signal detection.
29	RSSI	Input port for the receive signal level.
30	RFDETV	Input port for the power detection of power amplifier (RF unit; Q2).
31	THRMC	Input port for the transceiver's internal temperature.
32	SBATT	Input port for the battery type detection.
34	VIN	Input port for the battery voltage detection.
38	BEEP	Outputs BEEP audio signals.
109	PSTB	Outputs strobe signal to the PLL IC (RF unit; IC3).
110	PDATA	Outputs data signals to the PLL IC (RF unit; IC3).
111	PCK	Outputs clock signal to the PLL IC (RF unit; IC3).
112	TXC	Outputs control signal to the T5 regulator circuit (Q7, Q8, D8).
115	JACKDET	Input port for external SP jack connection detection. High: While external SP jack is connected.
119, 120	DICK, DIUD	Input ports for [DIAL].

4-5-2 EXPANDER (RF unit; IC5)

Pin number	Port name	Description
4	AFC	Outputs control signal to the AF out controller (Q35, Q36) for AF amplifier (IC6).
5	ALCC	Outputs control signal to the ALC controller (Q52).
6	R5C	Outputs control signal to the R5V regulator (Q20).
7	ANLC	Outputs control signal to the ANL switch (Q21).
11	MMUT	Outputs control signal for MIC mute switch (Q51).
12	DET-MUT	Outputs detector mute signal to the AM/FM switch (IC2, pin 2).
13	SHIFT	Outputs shift control signal to the VCO switch (Q57).
14	WXC	Outputs AM/FM (WX ch) select signal to the AM/FM switch (IC2, pin 5).

4-5-3 EXPANDER (RF unit; IC17)

Pin number	Port name	Description
2, 3, 10, 11	T1–T4	Outputs the bandpass filter tuning control signal.
14	MOD70	Outputs modulation control signal to the buffer-amplifier (IC18).
15	MOD30	Outputs modulation control signal to the ALC amplifier (IC19).
23	VOL	Outputs AF volume control signal to the AF amplifier (IC6).

SECTION 5 ADJUSTMENT PROCEDURE

5-1 PREPARATION

Most of adjustment must be adjusted in the "ADJUSTMENT MODE." CS-A24 CLONING SOFTWARE (REV. 1.0 or later) and OPC-478/U/UC CLONING CABLE are required.

■ REQUIRED TEST EQUIPMENT

EQUIPMENT	GRADE AND RANGE	EQUIPMENT	GRADE AND RANGE
DC power supply	Output voltage : 7.2 V/11 V Current capacity : 5 A or more	Audio generator	Frequency range : 300–3000 Hz Measuring range : 1–500 mV
RF power meter (terminated type)	Measuring range : 0.1–10 W Frequency range : 100–200 MHz Impedance : 50 Ω SWR : Less than 1.2 : 1	Attenuator	Power attenuation : 20 or 30 dB Capacity : More than 10 W
		Standard signal generator (SSG)	Frequency range : 0.1–300 MHz Output level : 0.1 µV to 32 mV (–127 to –17 dBm)
Frequency counter	Frequency range : 0.1–300 MHz Frequency accuracy : ±1 ppm or better Sensitivity : 100 mV or better	DC ammeter	Measuring range : 100–500 mA
Modulation analyzer	Frequency range : 30–300 MHz Measuring range : 0–100%	Distortion meter	Frequency range : 1 kHz±5% Measuring range : 1–100%
DC voltmeter	Input impedance : 10 MΩ/V DC or better	AC millivoltmeter	Measuring range : 10mV to 10 V
DC Ammeter	Mesurring range : 100 mA to 1 A	External speaker	Input impedance : 8 Ω Capacity : More than 1 W

■ SYSTEM REQUIREMENT

- RS-232C serial port or USB port
- Microsoft® Windows® 98/SE/ME/2000/XP

■ CLONING SOFTWARE INSTALLATION

1. Quit all applications when Windows is running.
2. Insert the CD into the appropriate CD drive.
3. Double-click the “Setup.exe” contained in the CD drive.
4. The “Welcome to the InstallShield Wizard for CS-A24” will appear. Click [Next>].
5. The “User Information” will appear, then type your name, your company name and the product ID number with the following manner. Then click [Next >].
   - ID number: 279201-(6 digit serial number)
   - e.g. the serial number on the CD is 000101, enter “279201-000101” as the ID number.
6. The “Choose Destination Location” will appear. Then click [Next>] to install the software to the destination folder. (e.g. C:\Program Files\Icom\CS-A24)
7. After the installation is completed, the “InstallShield Wizard Complete” will appear. Then click [Finish].
8. Eject the CD.
9. Program group ‘CS-A24’ appears in the ‘Programs’ folder of the start menu, and ‘CS-A24’ icon appears on the desk top screen.

CAUTION!: BACK UP the originally programmed memory data in the transceiver before starting the adjustment.

■ ENTERING ADJUSTMENT MODE

1. Turn transceiver’s power off. Connect IC-A24/A6 and PC with the optional OPC-478/U/UC.
2. Right click the CS-24's icon on the desktop and select the "Properties", then CS-24 propaties window appears.
3. Type "C:\Program File\Icom\CS-A24\CSA24.exe /expert" on the "Target" box and double click CS-A24's icon, then CS-A24 window appears.
4. Click [EXPERT] button, then "Expert window" appears. Select "Enable" the "Adjust Mode" box, and then cloning.
5. Turn power OFF. Disconnect OPC-478/U/UC from the transceiver.
6. Push and hold [CLR] and [SQL], then turn power ON.

■ OPERATING ON THE ADJUSTMENT MODE

Store the adjustment value : [ENT]
Change the adjustment item [UP] : [121.5]
Change the adjustment item [DOWN] : [MR]
Change the adjustment value : [DIAL]

■ EXITING THE ADJUSTMENT MODE

When the adjustment is finished, the transceiver must be cancelled adjustment mode to use normal operation, otherwise the transceiver does not work properly.

1. Turn transceiver’s power OFF and then power ON again.
2. Select "Disable" the "Adjust Mode" box on cloning software, and then cloning the original memory data.
3. Turn power OFF.

Microsoft and Windows are registered trademarks of Microsoft Corporation in the U.S.A. and other countries.

• PC SCREEN IN tHE ADJUSTMENT MODE

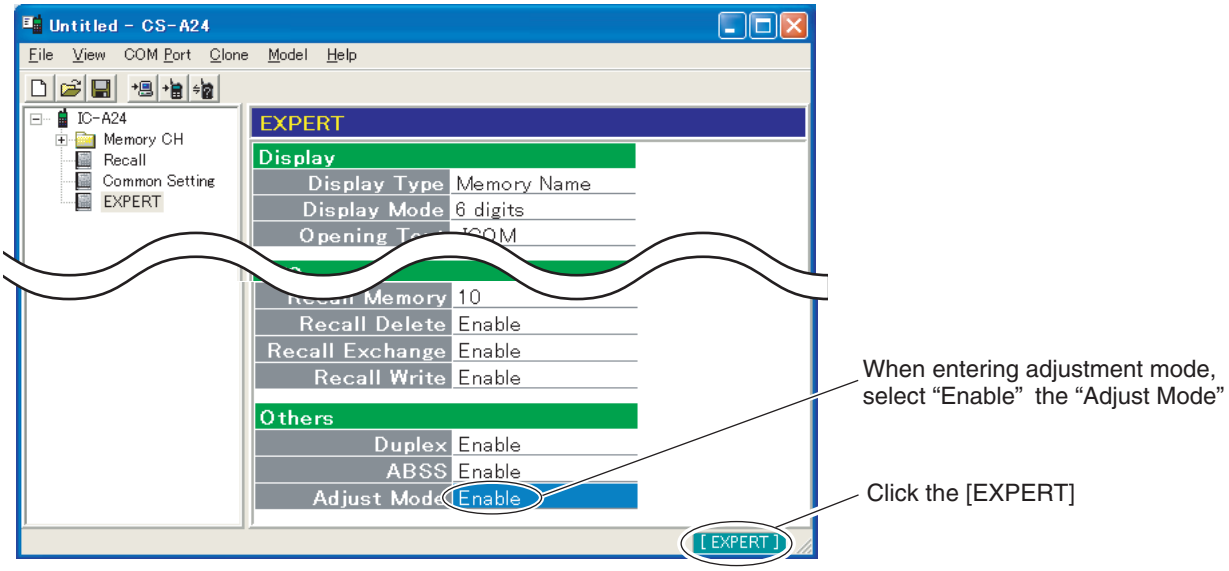

• CONNECTION

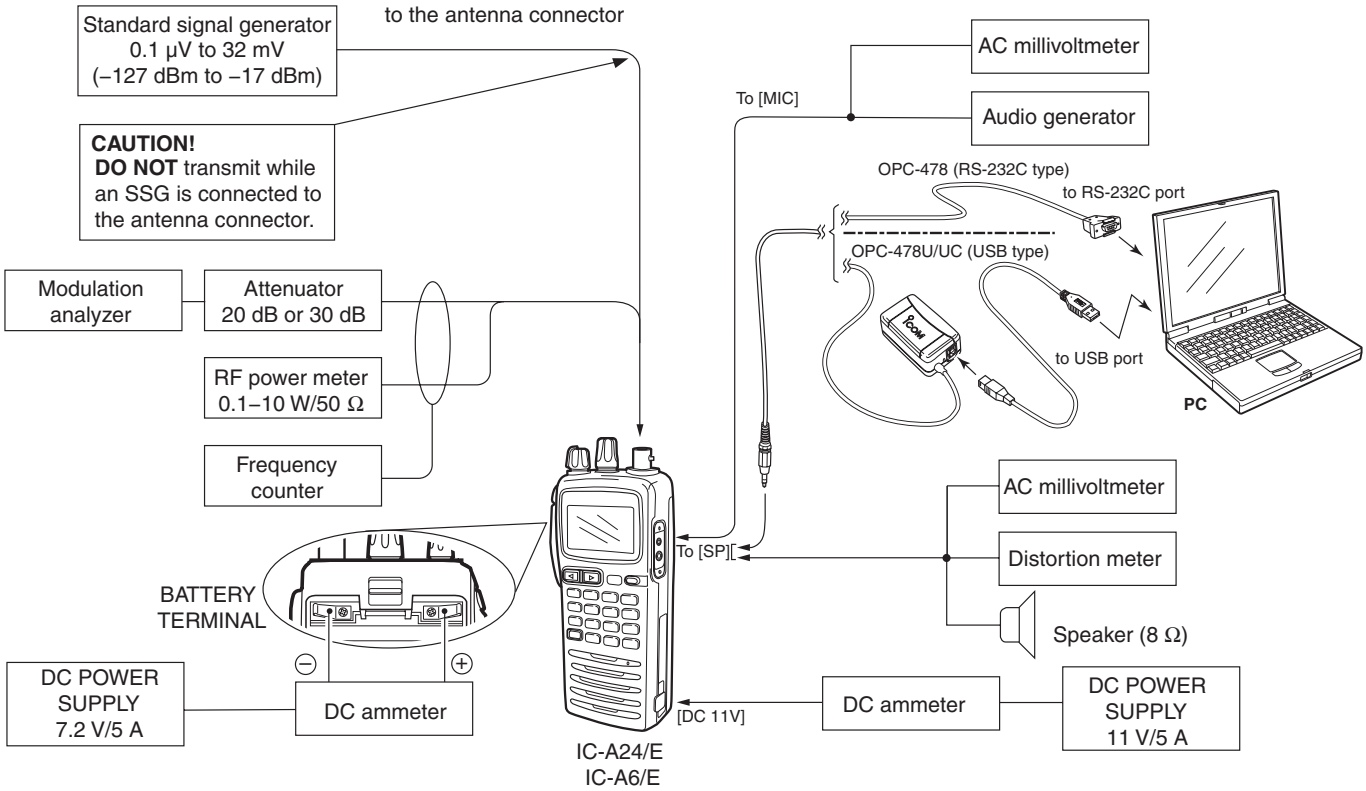

• DISPLAY IN THE ADJUSTMENT MODE

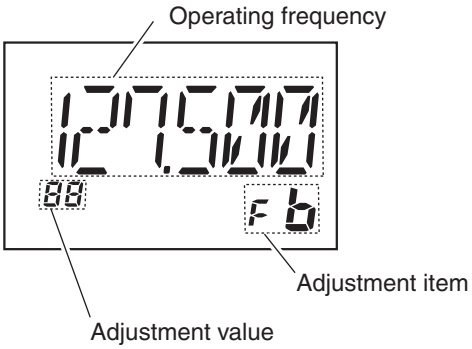

5-2 ADJUSTMENT

ADJUSTMENT		ADJUSTMENT CONDITION	OPERATION
IDLING CURRENT (for final amp.) [Fb]	1	• Operating frequency: 127.500 MHz • Connect a DC ammeter between the battery terminal and DC power supply (7.2 V).	• Measure the current at "00" point (Ⓐ). • Rotate [DIAL] to adjust the current Ⓐ+500 mA. • Push [ENT].
	2	• Operating frequency: 118.025 MHz	
	3	• Operating frequency: 136.975 MHz	
	4	• Operating frequency: 127.500 MHz • Connect DC ammeter between the [DC 11V] jack and DC power supply (11 V).	
	5	• Operating frequency: 118.025 MHz	
	6	• Operating frequency: 136.975 MHz	
move to "TX OUTPUT POWER"		Push [121.5] key 6 times. (Until you can find [rF])	
TX OUTPUT POWER [rF]	1	• Operating frequency: 127.500 MHz • Connect a 7.2 V DC power supply to the battery terminal. • No audio signal apply to the microphone connector. • Transmitting	• Preset IDLING CURRENT (for driver amp.) [db] to 67. Preset to 67 before adjusting TX output power. • Rotate [DIAL] to set output power to 1.5 W [USA], [GEN], [CHN]/1.0 W [EUR], [UK], [AUS] • Push [ENT] key.
	2	• Operating frequency: 118.025 MHz • Transmitting	
	3	• Operating frequency: 136.975 MHz • Transmitting	
move to "IDLING CURRENT" (for driver amp.)		Push [MR] key 9 times. (Until you can find [db])	
IDLING CURRENT (for driver amp.) (PRESET) [db]	1	• Operating frequency: 127.500 MHz • Connect a DC ammeter between the battery terminal and DC power supply (7.2 V).	• Measure the current at "00" point (Ⓑ). • Rotate [DIAL] to adjust the current Ⓑ+150 mA. • Push [ENT] key.
	2	• Operating frequency: 118.025 MHz	
	3	• Operating frequency: 136.975 MHz	
	4	• Operating frequency: 127.500 MHz • Connect a DC ammeter between the [DC 11V] jack and DC power supply (11 V).	
	5	• Operating frequency: 118.025 MHz	
	6	• Operating frequency: 136.975 MHz	
move to "MODULATION"		Push [121.5] key 3 times. (Until you can find [d3])	
MODULATION (PRESET) [d3]	1	• Operating frequency: 118.000 MHz • Connect a 7.2 V DC power supply to the battery terminal. • Connect an audio generator to the [MIC] connector and set as: 1 kHz/20 mVrms • Set a modulation analyzer as: HPF : OFF LPF : 20 kHz Detector : OFF • Transmitting	• Rotate [DIAL] to set to "80". • Push [ENT] key.
	2	• Connect an 11 V power supply to the [DC 11V] jack. • Transmitting	
MAX. MODULATION (PRESET) [d7]	1	• Operating frequency: 127.500 MHz • Connect a 7.2 V power supply to the battery terminal. • Connect an audio generator to the [MIC] connector and set as: 1 kHz/20 mVrms • Set a modulation analyzer as: HPF : OFF LPF : 20 kHz Detector : (P–P)/2 • Transmitting	• Rotate [DIAL] to set to 30% modulation.
	2	• Operating frequency: 118.025 MHz • Transmitting	
	3	• Operating frequency: 136.975 MHz • Transmitting	

5-2 ADJUSTMENT (continued)

ADJUSTMENT		ADJUSTMENT CONDITION	OPERATION
MAX. MODULATION (PRESET) [d7]	4	• Operating frequency: 127.500 MHz • Connect an 11 V power supply to the [DC 11V] jack. • Transmitting	• Rotate [DIAL] to set to 30% modulation.
	5	• Operating frequency: 118.025 MHz • Transmitting	
	6	• Operating frequency: 136.975 MHz • Transmitting	
move to "IDLING CURRENT" (for driver amp.)		Push [MR] key 17 times. (Until you can find [db])	
IDLING CURRENT (for driver amp.) [db]	1	• Operating frequency: 127.500 MHz • Connect a 7.2 V DC power supply to the battery terminal. • Connect an audio generator to the [MIC] connector and set as: 1 kHz/20 mVrms • Set a modulation analyzer as: HPF : OFF LPF : 20 kHz Detector : (P–P)/2 • Transmitting	• Rotate [DIAL] to adjust minimum distortion. • Push [ENT] key.
	2	• Operating frequency: 118.025 MHz • Transmitting	
	3	• Operating frequency: 136.975 MHz • Transmitting	
	4	• Operating frequency: 127.500 MHz • Connect an 11 V DC power supply to the [DC 11V] jack. • Transmitting	
	5	• Operating frequency: 118.025 MHz • Transmitting	
	6	• Operating frequency: 136.975 MHz • Transmitting	
move to "MAX MODULATION" (for driver amp.)		Push [MR] key 5 times. (Until you can find [d7])	
MAX. MODULATION [d7]	1	• Operating frequency: 127.500 MHz • Connect a 7.2 V DC power supply to the battery terminal. • Connect an audio generator to the [MIC] connector and set as: 1 kHz/200 mVrms • Set a modulation analyzer as: HPF : OFF LPF : 20 kHz Detector : (P–P)/2 • Transmitting	• Rotate [DIAL] to set to 30% modulation • Push [ENT] key.
	2	• Operating frequency: 118.025 MHz • Transmitting	
	3	• Operating frequency: 136.975 MHz • Transmitting	
	4	• Operating frequency: 127.500 MHz • Connect an 11 V DC power supply to the [DC 11V] jack. • Transmitting	
	5	• Operating frequency: 118.025 MHz • Transmitting	
	6	• Operating frequency: 136.975 MHz • Transmitting	
move to "SENSITIVITY"		Push [121.5] key once. (Skip [rS], and you can find [t1])	

SOFTWARE ADJUSTMENT (continued)

ADJUSTMENT		ADJUSTMENT CONDITION	OPERATION
SENSITIVITY [t 1]	1	• Operating frequency: 108.025 MHz • Connect an SSG to the antenna connector and set as: Level : –97 dBm* (3.2 µV) (No modulation) • Receiving	• Push [ENT] key.
[t 2]	2	• Operating frequency: 127.500 MHz • Receiving	• Push [ENT] key.
[t 3]	3	• Operating frequency: 136.975 MHz • Receiving	• Push [ENT] key.
[t 4]	4	• Operating frequency: 161.650 MHz • Receiving	• Push [ENT] key.
[t 5]	5	• Operating frequency: 163.275 MHz • Receiving	• Push [ENT] key.
SQUELCH [s 0]	1	• Operating frequency: 108.025 MHz (IC-A24) 118.025 MHz (IC-A6) • Connect an SSG to the antenna connector and set as: Level : –111 dBm* (0.63 µV) for IC-A24 –114 dBm* (0.45 µV) for IC-A6 (No modulation) • Receiving	• Push [ENT] key.
[s C]	2	• Connect an SSG to the antenna connector and set as: Level : –114 dBm* (0.45 µV) for IC-A24 –117 dBm* (0.32 µV) for IC-A6 (No modulation) • Receiving	• Push [ENT] key.
[s 0]	3	• Connect an SSG to the antenna connector and set as: Level : –82 dBm* (18 µV) (No modulation) • Receiving	• Push [ENT] key.
[s C]	4	• Connect an SSG to the antenna connector and set as: Level : –85 dBm* (13 µV) (No modulation) • Receiving	• Push [ENT] key.
[s 0]	5	• Operating frequency: 162.550 MHz • Connect an SSG to the antenna connector and set as: Level : –117 dBm* (0.32 µV) (No modulation) • Receiving	• Push [ENT] key.
[s C]	6	• Connect an SSG to the antenna connector and set as: Level : –120 dBm* (0.22 µV) (No modulation) • Receiving	• Push [ENT] key.
[s 0]	7	• Connect an SSG to the antenna connector and set as: Level : –82 dBm* (18 µV) (No modulation) • Receiving	• Push [ENT] key.
[s C]	8	• Connect an SSG to the antenna connector and set as: Level : –85 dBm* (13 µV) (No modulation) • Receiving	• Push [ENT] key.

*This output level of a standard signal generator (SSG) is indicated as SSG's open circuit.

SOFTWARE ADJUSTMENT (continued)

ADJUSTMENT		ADJUSTMENT CONDITION	OPERATION
VOR OFF (IC-A24 only) [uO]	1	• Operating frequency: 108.000 MHz • Connect a VOR tester to the antenna connector and set as: Level : –90 dBm* (7.1 µV) Modulation : 9960 Hz, 10% 30 Hz, 30% Bearing : 0° • Receiving	• Push [ENT] key.
VOR PHASE (IC-A24 only) [uA]	1	• Operating frequency: 108.000 MHz • Connect a VOR tester to the antenna connector and set as: Level : –60 dBm* (220 µV) Modulation : 9960 Hz, 30% 30 Hz, 30% Bearing : 0° • Receiving	• Push [ENT] key.
Finished. Turn off the radio.			

*This output level of a standard signal generator (SSG) is indicated as SSG's open circuit.

[LOGIC UNIT]

REF NO.	ORDER NO.	DESCRIPTION	M.	H/V LOCATION
IC1	1140012401	S.IC uPD780338GC-503-9EB-A	B	45.1/18.7
IC2	1110006310	S.IC BD5245G-TR	B	53.8/4.4
IC3	1110006090	S.IC XC6202P502PR	B	76.2/6.3
IC7	1130012430	S.IC S-24CS64A0I-T8T1G	B	57.4/6.2
IC11	1110003790	S.IC NJM2903V-TE1 [IC-A24/E] only	B	19/24.6
IC12	1110003780	S.IC NJM2902V-TE1 [IC-A24/E] only	B	11.9/25.3
IC13	1110003800	S.IC NJM2904V-TE1 [IC-A24/E] only	B	19.5/15.1
IC14	1110003790	S.IC NJM2903V-TE1 [IC-A24/E] only	B	8.9/13.3
IC16	1180002680	S.REG S-812C50BMC-C5E-T2G	B	70.3/26.7
Q1	1520000460	S.TR 2SB1132 T100 R	B	53.7/41.7
Q2	1530003281	S.TR 2SC4211-6-TL-E	B	49.8/40.2
Q3	1530003630	S.TR 2SC4617 TLS	B	76.4/26
Q4	1520000270	S.TR 2SB1182 TL Q	B	71.1/15.3
Q5	1590003270	S.TR UNR9210J-(TX)	B	63.7/6.7
Q6	1590003410	S.TR UNR9110J-(TX)	B	64.7/23.8
Q7	1590001170	S.TR XP1501-(TX) .AB	B	71.6/23
Q8	1590003290	S.TR UNR9213J-(TX)	B	15/41.3
Q9	1590003290	S.TR UNR9213J-(TX)	B	15/37.2
Q13	1530003281	S.TR 2SC4211-6-TL-E	B	23.9/7.6
Q15	1590001980	S.TR XP4315 (TX) [IC-A24/E] only	B	18.2/8.6
Q16	1590003290	S.TR UNR9213J-(TX)	B	79.4/42.9
D1	1790001250	S.DIO MA2S111-(TX)	B	55.6/31.1
D2	1790001200	S.DIO MA6S121 (TX)	B	52.4/35.8
D5	1790001250	S.DIO MA2S111-(TX)	B	54.8/33.2
D6	1790001250	S.DIO MA2S111-(TX) [IC-A24/E] only	B	55.9/36.5
D7	1730002300	S.ZEN MA8082-M (TX)	B	74.5/28.3
D8	1790001250	S.DIO MA2S111-(TX)	B	76/30.2
D10	1790001250	S.DIO MA2S111-(TX)	B	68.7/24.1
D11	1790001250	S.DIO MA2S111-(TX)	B	66.1/6
D16	1790001250	S.DIO MA2S111-(TX) [IC-A24/E] only	B	21.7/23.1
D17	1790001250	S.DIO MA2S111-(TX) [IC-A24/E] only	B	23.5/5.7
D18	1790001260	S.DIO MA2S077-(TX)	B	56.9/18.1
D19	1730002320	S.ZEN MA8051-M (TX)	B	81.9/40.9
X1	6050011550	S.XTL CR-747 (9.8304 MHz)	B	60.9/19.4
R1	7030005160	S.RES ERJ2GEJ 105 X (1 M)	B	37.4/9.6
R2	7030007320	S.RES ERJ2GEJ 225 X (2.2 M)	B	37.4/8.6
R5	7030005090	S.RES ERJ2GEJ 104 X (100 k)	B	74.9/25.7
R11	7030007570	S.RES ERJ2GEJ 122 X (1.2 k)	B	51.8/39.4
R12	7030007570	S.RES ERJ2GEJ 122 X (1.2 k)	B	55.5/39.4
R13	7030007570	S.RES ERJ2GEJ 122 X (1.2 k)	B	56.5/39.4
R14	7030007300	S.RES ERJ2GEJ 332 X (3.3 k)	B	50.1/42
R15	7030008410	S.RES ERJ2GEJ 392 X (3.9 k)	B	49.5/43.2
R16	7030005090	S.RES ERJ2GEJ 104 X (100 k)	B	75.6/23.4
R17	7030005050	S.RES ERJ2GEJ 103 X (10 k)	B	75.9/28
R18	7030005050	S.RES ERJ2GEJ 103 X (10 k)	B	77.1/28.3
R20	7030005050	S.RES ERJ2GEJ 103 X (10 k)	B	68.3/23.1
R21	7030005050	S.RES ERJ2GEJ 103 X (10 k)	B	71.1/19.6
R22	7030005040	S.RES ERJ2GEJ 472 X (4.7 k)	B	69.5/22.8
R25	7030009160	S.RES ERJ2GEJ 181 X (180)	B	15/39.7
R26	7030009160	S.RES ERJ2GEJ 181 X (180)	B	15/35.6
R30	7030007340	S.RES ERJ2GEJ 153 X (15 k)	B	57/10.5
R36	7030007340	S.RES ERJ2GEJ 153 X (15 k)	B	64.6/5.2
R60	7030007350	S.RES ERJ2GEJ 393 X (39 k) [IC-A24/E] only	B	18.7/28.9
R61	7030005240	S.RES ERJ2GEJ 473 X (47 k) [IC-A24/E] only	B	18.2/19.2
R62	7030005090	S.RES ERJ2GEJ 104 X (100 k) [IC-A24/E] only	B	18.2/18.2
R63	7030007340	S.RES ERJ2GEJ 153 X (15 k) [IC-A24/E] only	B	20.1/19.2
R64	7030005040	S.RES ERJ2GEJ 472 X (4.7 k) [IC-A24/E] only	B	26.2/16.5
R65	7030005110	S.RES ERJ2GEJ 224 X (220 k) [IC-A24/E] only	B	24.9/16
R66	7030005110	S.RES ERJ2GEJ 224 X (220 k) [IC-A24/E] only	B	23.8/16
R67	7030005050	S.RES ERJ2GEJ 103 X (10 k) [IC-A24/E] only	B	20.5/12.6
R68	7030005700	S.RES ERJ2GEJ 274 X (270 k) [IC-A24/E] only	B	18.5/12.6
R69	7030008290	S.RES ERJ2GEJ 183 X (18 k) [IC-A24/E] only	B	14.7/13
R70	7030008300	S.RES ERJ2GEJ 184 X (180 k) [IC-A24/E] only	B	14.2/15.1
R71	7030008290	S.RES ERJ2GEJ 183 X (18 k) [IC-A24/E] only	B	14.7/13.9
R72	7030005040	S.RES ERJ2GEJ 472 X (4.7 k) [IC-A24/E] only	B	15.6/12.1
R73	7030005040	S.RES ERJ2GEJ 472 X (4.7 k) [IC-A24/E] only	B	12.1/20.1
R74	7030005110	S.RES ERJ2GEJ 224 X (220 k) [IC-A24/E] only	B	15.1/25.5
R75	7030005720	S.RES ERJ2GEJ 563 X (56 k) [IC-A24/E] only	B	9.9/29.8
R76	7030005060	S.RES ERJ2GEJ 333 X (33 k) [IC-A24/E] only	B	9.4/31.1
R77	7030005110	S.RES ERJ2GEJ 224 X (220 k) [IC-A24/E] only	B	13.9/29.8
R78	7030005040	S.RES ERJ2GEJ 472 X (4.7 k) [IC-A24/E] only	B	16.1/25.5

[LOGIC UNIT]

REF NO.	ORDER NO.	DESCRIPTION	M.	H/V LOCATION
R79	7030005290	S.RES ERJ2GEJ 682 X (6.8 k) [IC-A24/E] only	B	15.9/21.9
R80	7030005100	S.RES ERJ2GEJ 154 X (150 k) [IC-A24/E] only	B	13.8/20.1
R81	7030008400	S.RES ERJ2GEJ 182 X (1.8 k) [IC-A24/E] only	B	15.9/20.1
R82	7030005040	S.RES ERJ2GEJ 472 X (4.7 k) [IC-A24/E] only	B	15/20.1
R83	7030005110	S.RES ERJ2GEJ 224 X (220 k) [IC-A24/E] only	B	10/20.9
R84	7030005040	S.RES ERJ2GEJ 472 X (4.7 k) [IC-A24/E] only	B	10/20
R85	7030008290	S.RES ERJ2GEJ 183 X (18 k) [IC-A24/E] only	B	8.7/22.1
R86	7030005040	S.RES ERJ2GEJ 472 X (4.7 k) [IC-A24/E] only	B	8.7/20.3
R87	7510000940	S.TMR TBPS1R473K475H5Q [IC-A24/E] only	B	7.5/21.7
R88	7030005060	S.RES ERJ2GEJ 333 X (33 k) [IC-A24/E] only	B	7.4/20
R89	7030005000	S.RES ERJ2GEJ 471 X (470) [IC-A24/E] only	B	16/9.3
R90	7030005090	S.RES ERJ2GEJ 104 X (100 k) [IC-A24/E] only	B	5.3/10.9
R91	7030007350	S.RES ERJ2GEJ 393 X (39 k) [IC-A24/E] only	B	24.2/10.3
R93	7030005170	S.RES ERJ2GEJ 474 X (470 k) [IC-A24/E] only	B	24.2/9.4
R94	7030009150	S.RES ERJ2GEJ 824 X (820 k) [IC-A24/E] only	B	26.1/8.7
R95	7030005220	S.RES ERJ2GEJ 223 X (22 k) [IC-A24/E] only	B	22.6/9.4
R96	7030005090	S.RES ERJ2GEJ 104 X (100 k) [IC-A24/E] only	B	13.2/12.2
R98	7030005040	S.RES ERJ2GEJ 472 X (4.7 k)	B	66.5/24.1
R107	7030005160	S.RES ERJ2GEJ 105 X (1 M)	B	5.2/22.9
R108	7030005160	S.RES ERJ2GEJ 105 X (1 M)	B	5.2/20.6
R112	7030007320	S.RES ERJ2GEJ 225 X (2.2 M)	B	26.2/5.5
R130	7210003190	VAR TP76N00-15F-10KA-2791		
R133	7030005090	S.RES ERJ2GEJ 104 X (100 k)	B	50.1/8
R135	7030005120	S.RES ERJ2GEJ 102 X (1 k)	B	37.7/7.1
R136	7030005120	S.RES ERJ2GEJ 102 X (1 k)	B	37.7/4.9
R137	7030005090	S.RES ERJ2GEJ 104 X (100 k)	B	41.3/5.9
R138	7030005120	S.RES ERJ2GEJ 102 X (1 k)	B	41.3/4.9
R139	7030005120	S.RES ERJ2GEJ 102 X (1 k)	B	47.6/5.7
R140	7030005120	S.RES ERJ2GEJ 102 X (1 k)	B	48/7
R141	7030005120	S.RES ERJ2GEJ 102 X (1 k)	B	48.4/8
R143	7030010040	S.RES ERJ2GEJ-JPW	B	54.6/9.1
R145	7030005160	S.RES ERJ2GEJ 105 X (1 M)	B	51.3/37.5
R146	7030005160	S.RES ERJ2GEJ 105 X (1 M)	B	54.3/36.4
R147	7030005160	S.RES ERJ2GEJ 105 X (1 M)	B	55.7/34.2
R148	7030005160	S.RES ERJ2GEJ 105 X (1 M)	B	55.4/32.1
R151	7510001661	S.TMR NTCG16 4LH 473JT	B	62/7.6
R152	7030005090	S.RES ERJ2GEJ 104 X (100 k)	B	60.5/8.2
R153	7030005090	S.RES ERJ2GEJ 104 X (100 k)	B	43.3/4.9
R154	7030010040	S.RES ERJ2GEJ-JPW	B	65.5/28.2
R155	7030010040	S.RES ERJ2GEJ-JPW	B	66.5/23.1
R558	7030008010	S.RES ERJ2GEJ 123 X (12 k) [IC-A24/E] only	B	26.1/6.9
R559	7030005160	S.RES ERJ2GEJ 105 X (1 M)	B	16.1/10.9
R560	7030005160	S.RES ERJ2GEJ 105 X (1 M)	B	4.2/12.2
R561	7030008010	S.RES ERJ2GEJ 123 X (12 k)	B	57.4/19.1
R562	7030008010	S.RES ERJ2GEJ 123 X (12 k)	B	55.1/15.1
R563	7030008010	S.RES ERJ2GEJ 123 X (12 k)	B	57.8/20.3
R564	7030005090	S.RES ERJ2GEJ 104 X (100 k)	B	53.4/12.3
R565	7030005090	S.RES ERJ2GEJ 104 X (100 k)	B	57.8/11.5
R566	7030010040	S.RES ERJ2GEJ-JPW	B	60.1/5.7
R567	7030007290	S.RES ERJ2GEJ 222 X (2.2 k)	B	80/39.4
R568	7030005060	S.RES ERJ2GEJ 333 X (33 k)	B	80.5/40.9
R569	7030005050	S.RES ERJ2GEJ 103 X (10 k)	B	51.9/7.1
R570	7030005120	S.RES ERJ2GEJ 102 X (1 k)	B	64.7/41.5
R571	7030005120	S.RES ERJ2GEJ 102 X (1 k)	B	63.1/38.7
R572	7030005120	S.RES ERJ2GEJ 102 X (1 k)	B	73/42.6
R576	7030005120	S.RES ERJ2GEJ 102 X (1 k)	B	55/23.2
R578	7030005120	S.RES ERJ2GEJ 102 X (1 k)	B	73.8/36.1
R586	7030007300	S.RES ERJ2GEJ 332 X (3.3 k)	B	52.2/9.1
R588	7030005120	S.RES ERJ2GEJ 102 X (1 k)	B	73/41.7
R589	7030005120	S.RES ERJ2GEJ 102 X (1 k)	B	64.7/42.4
R590	7030005120	S.RES ERJ2GEJ 102 X (1 k)	B	64.7/40.6
R591	7030005120	S.RES ERJ2GEJ 102 X (1 k)	B	64.7/39.1
R592	7030005120	S.RES ERJ2GEJ 102 X (1 k)	B	64.7/36.8
R593	7410001130	S.ARY EXB28V102JX	B	51.4/28
R594	7410001130	S.ARY EXB28V102JX	B	52.4/30.6
R595	7030003860	S.RES ERJ3GE JPW V	B	72.7/4.2
C1	4030017480	S.CER C1608 JB 1A 474K-T	B	39.1/9.9
C2	4030016930	S.CER ECJ0EB1A104K	B	51.3/10.3
C6	4030017460	S.CER ECJ0EB1E102K	B	76.5/24.4
C7	4030017580	S.CER ECJ0EC1H060C	B	57.4/15.5
C8	4030017660	S.CER ECJ0EC1H330J	B	57.8/13.4
C9	4030016930	S.CER ECJ0EB1A104K	B	50.7/43.2
C20	4030017460	S.CER ECJ0EB1E102K	B	77.4/23.4
C22	4030017460	S.CER ECJ0EB1E102K	B	77.1/27.4
C23	4030017460	S.CER ECJ0EB1E102K	B	54/6.5
C24	4030016790	S.CER ECJ0EB1C103K	B	51.4/3.6
C25	4030016790	S.CER ECJ0EB1C103K	B	77.4/3.1
C26	4550007220	S.TAN F931A476MCMBMA	B	80.5/8.8

M.=Mounted side (T: Mounted on the Top side, B: Mounted on the Bottom side)
S.=Surface mount

[LOGIC UNIT]

REF NO.	ORDER NO.	DESCRIPTION	M.	H/V LOCATION
C27	4030017460	S.CER ECJ0EB1E102K	B	65/27.2
C28	4550006350	S.TAN TEESVB2 1A 226M8R	B	65.9/19.8
C29	4030016930	S.CER ECJ0EB1A104K	B	68.7/21.1
C31	4030017460	S.CER ECJ0EB1E102K	B	74.9/3
C33	4030017460	S.CER ECJ0EB1E102K	B	63.4/9
C34	4550007220	S.TAN F931A476MCMBMA	B	65.8/12.7
C35	4030017460	S.CER ECJ0EB1E102K	B	72.9/24.7
C43	4030017460	S.CER ECJ0EB1E102K	B	15/38.7
C44	4030017460	S.CER ECJ0EB1E102K	B	58.8/10.5
C101	4030017460	S.CER ECJ0EB1E102K [IC-A24/E] only	B	16.9/19.7
C102	4030017730	S.CER ECJ0EB1E471K [IC-A24/E] only	B	21.2/21.2
C103	4550006250	S.TAN TEESVA 1A 106M8R [IC-A24/E] only	B	5.7/31.5
C104	4550007670	S.TAN F931C105MAABMA	B	7.8/31.5
C105	4550006250	S.TAN TEESVA 1A 106M8R [IC-A24/E] only	B	12/31.7
C106	4030017460	S.CER ECJ0EB1E102K [IC-A24/E] only	B	10.4/31.1
C107	4030016930	S.CER ECJ0EB1A104K [IC-A24/E] only	B	15.9/23.7
C108	4030017460	S.CER ECJ0EB1E102K [IC-A24/E] only	B	13.8/21
C109	4030017460	S.CER ECJ0EB1E102K [IC-A24/E] only	B	15/21.9
C110	4550000530	S.TAN TEESVA 1V 104M8R [IC-A24/E] only	B	15.6/31.4
C111	4550003080	S.TAN TEESVA 1A 335M8R [IC-A24/E] only	B	8.1/25.6
C112	4550000530	S.TAN TEESVA 1V 104M8R [IC-A24/E] only	B	9.1/18.5
C113	4550000530	S.TAN TEESVA 1V 104M8R [IC-A24/E] only	B	9.1/16.4
C114	4550000530	S.TAN TEESVA 1V 104M8R [IC-A24/E] only	B	23.8/20.1
C115	4550000530	S.TAN TEESVA 1V 104M8R [IC-A24/E] only	B	23.8/18
C116	4030017460	S.CER ECJ0EB1E102K [IC-A24/E] only	B	15.3/16.7
C117	4550000530	S.TAN TEESVA 1V 104M8R [IC-A24/E] only	B	12.6/17.2
C118	4030017780	S.CER ECJ0EB1E472K [IC-A24/E] only	B	15.3/15.1
C119	4030017460	S.CER ECJ0EB1E102K [IC-A24/E] only	B	15.6/8.1
C120	4550006350	S.TAN TEESVB2 1A 226M8R [IC-A24/E] only	B	12.3/9.7
C121	4030016790	S.CER ECJ0EB1C103K [IC-A24/E] only	B	25.4/9.9
C122	4030016930	S.CER ECJ0EB1A104K [IC-A24/E] only	B	25.3/5.5
C123	4030017460	S.CER ECJ0EB1E102K [IC-A24/E] only	B	20.1/8.8
C125	4550006250	S.TAN TEESVA 1A 106M8R [IC-A24/E] only	B	19.3/11.1
C135	4550006250	S.TAN TEESVA 1A 106M8R	B	67.4/27.2
C138	4030017480	S.CER C1608 JB 1A 474K-T	B	36/13.4
C139	4030017480	S.CER C1608 JB 1A 474K-T	B	36.6/12.1
C140	4030017480	S.CER C1608 JB 1A 474K-T	B	36.6/10.8
C142	4030017460	S.CER ECJ0EB1E102K	B	64.6/25.6
C143	4030016930	S.CER ECJ0EB1A104K	B	47.2/4.4
C144	4030017460	S.CER ECJ0EB1E102K	B	48.2/4.4
C145	4030016930	S.CER ECJ0EB1A104K	B	49.2/4.4
C146	4030016930	S.CER ECJ0EB1A104K	B	51.2/4.6
C147	4030016930	S.CER ECJ0EB1A104K	B	52.4/32.6
C148	4030016790	S.CER ECJ0EB1C103K	B	39.5/4.7
C149	4030016930	S.CER ECJ0EB1A104K	B	39.5/5.8
C150	4030016790	S.CER ECJ0EB1C103K	B	39.5/6.8
C151	4030016790	S.CER ECJ0EB1C103K	B	40.7/8.7
C154	4030016930	S.CER ECJ0EB1A104K	B	52.4/12
C155	4030017460	S.CER ECJ0EB1E102K	B	57.1/27.2
C156	4030017460	S.CER ECJ0EB1E102K	B	58/27.2
C157	4030017440	S.CER ECJ0EC1H221J	B	55.3/27.2
C158	4030017440	S.CER ECJ0EC1H221J	B	56.2/27.2
C159	4030017440	S.CER ECJ0EC1H221J	B	58.9/27.2
C160	4030017460	S.CER ECJ0EB1E102K	B	52.4/33.5
C161	4030017460	S.CER ECJ0EB1E102K	B	60.5/7.2
C162	4030017460	S.CER ECJ0EB1E102K	B	63/43
C163	4030017460	S.CER ECJ0EB1E102K	B	63.8/30.9
C164	4030017460	S.CER ECJ0EB1E102K	B	60.4/40.5
C165	4030017430	S.CER ECJ0EC1H101J	B	60.4/39.6
C166	4030017430	S.CER ECJ0EC1H101J	B	60.4/37.8
C167	4030017430	S.CER ECJ0EC1H101J	B	61.9/35
C168	4030017460	S.CER ECJ0EB1E102K	B	62.9/30.9
C169	4030017460	S.CER ECJ0EB1E102K	B	60.4/41.4
C170	4030017460	S.CER ECJ0EB1E102K	B	66/30.6
C171	4030017460	S.CER ECJ0EB1E102K	B	61.2/36.8
C172	4030017430	S.CER ECJ0EC1H101J	B	60.4/38.7
C173	4030017460	S.CER ECJ0EB1E102K	B	61.9/35.9
C174	4030017460	S.CER ECJ0EB1E102K	B	62/30.9
C175	4030017460	S.CER ECJ0EB1E102K	B	74.6/33
C176	4030017460	S.CER ECJ0EB1E102K	B	75.1/34.2
C177	4030017460	S.CER ECJ0EB1E102K	B	76.7/35.6
C178	4030017460	S.CER ECJ0EB1E102K	B	78/34.4
C179	4030017460	S.CER ECJ0EB1E102K	B	76.9/36.7
C180	4030017460	S.CER ECJ0EB1E102K	B	77.6/37.6
C181	4030017460	S.CER ECJ0EB1E102K	B	77.6/39.1
C182	4030017460	S.CER ECJ0EB1E102K	B	77.3/40.5
C183	4030017460	S.CER ECJ0EB1E102K	B	76.5/41.4
C184	4030017430	S.CER ECJ0EC1H101J	B	75.1/43.4
C600	4030016790	S.CER ECJ0EB1C103K [IC-A24/E] only	B	26.1/7.8
C602	4030017460	S.CER ECJ0EB1E102K	B	74.6/32.1
C603	4030017460	S.CER ECJ0EB1E102K	B	73.1/30.6
C604	4030017460	S.CER ECJ0EB1E102K	B	68.6/30.6
C605	4030017460	S.CER ECJ0EB1E102K	B	64.7/30.3
C606	4030017460	S.CER ECJ0EB1E102K	B	66.9/30.6
C607	4030017440	S.CER ECJ0EC1H221J	B	57.8/16.7
C608	4030016790	S.CER ECJ0EB1C103K	B	57.4/22.7
C609	4030016790	S.CER ECJ0EB1C103K	B	56/15.1
C610	4030017730	S.CER ECJ0EB1E471K	B	57.4/21.8
C611	4030017460	S.CER ECJ0EB1E102K	B	73.5/43.8
C612	4030017430	S.CER ECJ0EC1H101J	B	69.5/30.6
C613	4030017460	S.CER ECJ0EB1E102K	B	71.3/30.6
C614	4030017730	S.CER ECJ0EB1E471K	B	79.5/40.9
C615	4030017420	S.CER ECJ0EC1H470J	B	81.6/43.1

[LOGIC UNIT]

REF NO.	ORDER NO.	DESCRIPTION	M.	H/V LOCATION
C616	4030016930	S.CER ECJ0EB1A104K	B	79.5/37.4
C617	4030017460	S.CER ECJ0EB1E102K	B	61.4/42.3
C618	4030017460	S.CER ECJ0EB1E102K	B	52.3/10.3
C619	4030017460	S.CER ECJ0EB1E102K	B	53.4/10.7
C620	4030017460	S.CER ECJ0EB1E102K	B	45.1/4.2
C621	4030017430	S.CER ECJ0EC1H101J	B	70.4/30.6
C622	4030017430	S.CER ECJ0EC1H101J	B	72.2/30.6
C623	4030017430	S.CER ECJ0EC1H101J	B	73.9/33.9
J1	6510020120	S.CNR AXK6S40545P	B	68.8/38.4
DS1	5030002700	LCD A0280 LCD40.8x27.5 (26)		
DS2	5040002961	S.LED SML-A12MT T86J	T	2.8/32.7
DS3	5040002961	S.LED SML-A12MT T86J	T	2.8/14.7
DS5	5040002930	S.LED SML-512MW T86	T	42.2/34.3
DS6	5040002930	S.LED SML-512MW T86	T	54.4/33.9
DS7	5040002930	S.LED SML-512MW T86	T	69.4/33.9
DS8	5040002930	S.LED SML-512MW T86	T	41.4/13.2
DS9	5040002930	S.LED SML-512MW T86	T	54.4/13.4
DS10	5040002930	S.LED SML-512MW T86	T	69.4/13.4
MC1	7700002310	MIC EM-140		
S1	7600000210	ECR TP70N00E20-15F-1903		
EP2	8930063550	LCT SRCN-2791-SP-N-W		

M.=Mounted side (T: Mounted on the Top side, B: Mounted on the Bottom side)
S.=Surface mount

[RF UNIT]

REF NO.	ORDER NO.	DESCRIPTION	M.	H/V LOCATION
IC1	1110003491	S.IC TA31136FNG (D,EL)	B	70.8/5.5
IC2	1130006221	S.IC TC4W53FU (TE12L,F)	B	105.5/9.6
IC3	1130008831	S.IC TB31207AFNG (EL)	B	93.3/20.2
IC5	1130007570	S.IC BU4094BCFV-E2	B	76.4/30
IC6	1110001811	S.IC TA7368FG (5,ER)	B	47.8/32.7
IC13	1110002400	S.IC NJM2107F-TE1	B	62.3/8.3
IC15	1110005310	S.IC AN6123MS	T	93.8/5.6
IC16	1110006400	S.IC M62343GP D65J	T	42.6/20.9
IC17	1190000350	S.IC M62363FP-650C	B	106.8/17.8
IC18	1110006470	S.IC LMV324IPWR	T	107.2/14.5
IC19	1110002400	S.IC NJM2107F-TE1	T	90.6/9.2
Q1	1590001160	S.TR XP1401-(TX) .AB	B	52.1/8.3
Q2	1560001371	S.FET RD12MVS1-T112	T	28.2/11.7
Q3	1560001241	S.FET RD01MUS1-T113	T	37/10.7
Q4	1530003340	S.TR 2SC3357-T1 RF	T	46.2/10.4
Q5	1530003281	S.TR 2SC4211-6-TL-E	T	52.3/8.7
Q6	1530002561	S.TR 2SC4403-3-TL-E	T	55.2/9.4
Q7	1520000460	S.TR 2SB1132 T100 R	B	48.8/3.1
Q8	1530003281	S.TR 2SC4211-6-TL-E	B	52.7/2.4
Q9	1540000520	S.TR 2SD1819A (TX) R	B	23.7/20
Q10	1540000520	S.TR 2SD1819A (TX) R	B	37/19.7
Q11	1580000731	S.FET 3SK293 (TE85L,F)	B	37.9/23.3
Q12	1580000760	S.FET 3SK299-T1 U73	B	60.1/22.5
Q13	1530002601	S.TR 2SC4215-O (TE85R,F)	T	68.6/14.6
Q14	1540000520	S.TR 2SD1819A (TX) R	B	105.5/6.6
Q15	1530002601	S.TR 2SC4215-O (TE85R,F)	B	79.4/6.9
Q16	1530002601	S.TR 2SC4215-O (TE85R,F)	B	85.7/8
Q17	1530002601	S.TR 2SC4215-O (TE85R,F)	B	92.6/6.7
Q18	1530003281	S.TR 2SC4211-6-TL-E	B	96.2/8.6
Q19	1590003390	S.TR UNR9215J-(TX) [IC-A24/E] only	B	101.2/2.5
Q20	1590003250	S.TR UNR9115J-(TX)	B	66.1/24.4
Q21	1590003270	S.TR UNR9210J-(TX)	B	101.4/5.1
Q22	1520000651	S.TR 2SB1201S-TL-E [UK], [CHN], [UK], [AUS] only	T	108.1/29.1
Q24	1590002580	S.FET HAT1024R-EL	B	14/8.6
Q25	1520000460	S.TR 2SB1132 T100 R	B	94.7/39
Q26	1590003280	S.TR UNR9211J-(TX)	B	96.4/35.2
Q28	1530002561	S.TR 2SC4403-3-TL-E	B	70.4/19.6
Q29	1530002561	S.TR 2SC4403-3-TL-E	B	84.7/15.8
Q33	1530002851	S.TR 2SC4116-BL (TE85R,F)	T	93.6/17.3
Q35	1520000651	S.TR 2SB1201S-TL-E [UK], [CHN], [UK], [AUS] only	T	53.8/36
Q36	1590001170	S.TR XP1501-(TX) .AB	T	58.8/35
Q39	1590003290	S.TR UNR9213J-(TX)	B	103.6/28.5
Q40	1510000671	S.TR 2SA1588-GR (TE85R, F)	B	107.2/28.8
Q41	1530003630	S.TR 2SC4617 TLS	B	109.9/28.9
Q45	1560000541	S.FET 2SK880-Y (T5RICOM,F)	B	96.6/29.3
Q50	1510000771	S.TR 2SA1586-GR (TE85R,F)	B	55.2/38.9
Q51	1590003280	S.TR UNR9211J-(TX)	B	93.2/34.2
Q52	1590001980	S.TR XP4315 (TX)	T	104.2/4.2
Q56	1590001650	S.TR XP4601 (TX)	T	36.4/20.7
Q57	1590001810	S.TR XP1113 (TX)	T	83.1/17
Q58	1530002920	S.TR 2SC4226-T1 R25	T	77.6/22.9
Q59	1530002920	S.TR 2SC4226-T1 R25	T	85.6/20.8
Q60	1530002920	S.TR 2SC4226-T1 R25	T	76.5/18.2
Q61	1590003270	S.TR UNR9210J-(TX)	B	41.7/18.7
D1	1710000871	S.DIO HVU131TRF-E [UK], [CHN], [UK], [AUS] only	T	17.9/24.7
D2	1790000660	S.DIO MA728 (TX)	B	15.2/21.6
D3	1790000660	S.DIO MA728 (TX)	B	15.2/16.8
D4	1750000461	S.DIO 1SV246-TL-E	T	51.3/12.2
D5	1750000461	S.DIO 1SV246-TL-E	T	64.1/10.7
D6	1790000620	S.DIO MA77 (TX)	T	64.8/16.5
D7	1790001280	S.DIO MA111 (TX)	B	52.9/4.6
D8	1710000871	S.DIO HVU131TRF-E [UK], [CHN], [UK], [AUS] only	T	24/27.8
D9	1710000871	S.DIO HVU131TRF-E [UK], [CHN], [UK], [AUS] only	B	22.4/26.1
D13	1720000730	S.VCP MA2S30400L	B	28.4/22.8
D14	1720000730	S.VCP MA2S30400L	B	45.2/23.7
D15	1720000730	S.VCP MA2S30400L	B	50.6/22.9
D16	1720000730	S.VCP MA2S30400L	B	53.9/22.9
D17	1790000620	S.DIO MA77 (TX)	B	62.4/18.7
D18	1750001120	S.DIO MA785-(TX)	B	99.3/9.9
D19	1750000540	S.DIO RB060L-40 TE-25	B	101/34.1
D20	1790000671	S.DIO SB07-03C-TB-E	B	113/24.4
D21	1790000860	S.DIO MA133 (TX)	B	111.4/32.2
D22	1790001240	S.DIO MA2S728-(TX)	B	18.7/7.4
D23	1790000860	S.DIO MA133 (TX)	B	98.9/40.4
D27	1790001280	S.DIO MA111 (TX)	B	91.4/36.7
D29	1750000531	S.DIO 1SV271 (TPH3,F)	B	23.6/22.6
D30	1750000940	S.DIO ISS400 TE61	T	94.7/34.1
D31	1750000940	S.DIO ISS400 TE61	T	12.4/8.7
D32	1790001250	S.DIO MA2S111-(TX)	B	109.2/26.2
D36	1790001250	S.DIO MA2S111-(TX)	B	48/38.5
D37	1790001250	S.DIO MA2S111-(TX)	T	36.5/22.9
D38	1750000711	S.VCP HVC350BTRF-E [UK], [CHN], [UK], [AUS] only	T	81.6/28.1
D39	1720000730	S.VCP MA2S30400L	T	87.1/26.2
D40	1750000531	S.DIO 1SV271 (TPH3,F)	B	82.2/2.1
D41	1750000531	S.DIO 1SV271 (TPH3,F)	B	78.6/3.1
D42	1750000531	S.DIO 1SV271 (TPH3,F)	T	70.6/17.3
D43	1790001260	S.DIO MA2S077-(TX)	B	43.3/24.8
D44	1720000730	S.VCP MA2S30400L	B	45.7/26.2
D45	1720000730	S.VCP MA2S30400L	T	87.1/27.5
D46	1720000730	S.VCP MA2S30400L	T	87.2/24.9
D47	1720000730	S.VCP MA2S30400L	T	87.2/23.6
D48	1750000711	S.VCP HVC350BTRF-E [UK], [CHN], [UK], [AUS] only	T	80.3/28.1
D51	1750000461	S.DIO 1SV246-TL-E	T	61.6/10.8

[RF UNIT]

REF NO.	ORDER NO.	DESCRIPTION	M.	H/V LOCATION
D52	1790001250	S.DIO MA2S111-(TX)	T	62.9/37.5
FI1	2030000390	S.MLH FL-378 (30.05 MHz) except [AUS]	T	67.2/24.3
	2030000610	S.MLH DSF753SBFFL-4130.05MHZ [AUS]	T	67.2/24.3
FI2	2020002160	S.CER CFWKA450KFFA-R0 [AUS]	T	73.5/4.7
	2020002400	S.CER CFWKA450KDFA-R0 except [AUS]	T	73.5/4.7
X1	6070000191	S.DCR CDBKB450KCAY24-R0	T	64.2/4.8
X2	6050012020	S.XTL CR-791 (29.6 MHz)	B	100.3/27
L1	6200012470	S.COL 0.30-1.7-7TL 45.3N	T	12.1/36.9
L2	6200013110	S.COL 0.35-1.6-9TL 52.0N	T	17.6/32.8
L3	6200013110	S.COL 0.35-1.6-9TL 52.0N	T	18.5/28.9
L4	6200001520	S.COL MLF2012D R82K-T	B	20/23.5
L5	6200013030	S.COL 0.35-1.6-6TL 31.0N	T	18/18.1
L6	6200012850	S.COL 0.40-0.8-2TL 2.5N	T	20.6/14.2
L7	6200013030	S.COL 0.35-1.6-6TL 31.0N	T	22.9/16.9
L8	6200005711	S.COL ELJRE 27NGFA	T	32.9/15.3
L10	6200010010	S.COL C2012C-39NG-A	T	35.3/17.2
L11	6200005741	S.COL ELJRE 47NGFA	T	39.6/14
L12	6200007001	S.COL ELJRE 82NGFA	T	46.1/13.9
L13	6200006981	S.COL ELJRE R10GFA	T	55.5/12.2
L14	6200002190	S.COL MLF2012A 4R7K-T	T	59.1/14.4
L15	6200012910	S.COL 0.35-1.6-8TL 45.5N	T	21.1/25.1
L16	6200012470	S.COL 0.30-1.7-7TL 45.3N	T	24.9/24.3
L17	6200003550	S.COL MLF1608A 4R7K-T	B	21.8/20.8
L18	6200007730	S.COL LQW2BHN39NJ03L	B	26.6/25.4
L21	6200008090	S.COL LQW2BHN68NJ03L	B	40.5/23.6
L22	6200007760	S.COL LQW2BHN82NJ03L	B	47.9/22.4
L23	6200008090	S.COL LQW2BHN68NJ03L	B	52.2/22.4
L24	6200002750	S.COL MLF2012A 2R2K-T	B	62.1/20.5
L38	6200005510	S.COL ELJND R27J-F	B	69.6/16.7
L42	6200002190	S.COL MLF2012A 4R7K-T	B	85/21.8
L44	6200003960	S.COL MLF1608A 1R0K-T	T	71.5/19.7
L45	6200013110	S.COL 0.35-1.6-9TL 52.0N	T	15.6/36.6
L46	6200012870	S.COL 0.30-1.4-5TR 23.5N	T	17.8/11.4
L50	6200002041	S.COL NLV25T-101J	B	81.9/8.1
L51	6200002041	S.COL NLV25T-101J	B	90.7/9.2
L52	6200003550	S.COL MLF1608A 4R7K-T	B	24/24.7
L55	6200007001	S.COL ELJRE 82NGFA	T	58.7/11.3
L56	6200007001	S.COL ELJRE 82NGFA	T	53.7/15.1
L57	6200003640	S.COL MLF1608E 100K-T	T	81/25
L58	6200003640	S.COL MLF1608E 100K-T	T	84.6/26.9
L59	6200004480	S.COL MLF1608D R82K-T	T	80.2/19.6
L60	6200004480	S.COL MLF1608D R82K-T	T	87/17.6
L63	6200009920	S.COL C2012C-R10G-A	T	78.1/26.7
L64	6200009930	S.COL C2012C-68NG-A [AUS]	T	83.9/23.4
	6200011050	S.COL C2012C-R12G-A except [AUS]	T	83.9/23.4
L67	6200007001	S.COL ELJRE 82NGFA	T	79.2/16.7
L68	6200003281	S.COL NLV25T-2R2J	B	57.5/24.2
L70	6200010540	S.COL C2012C-47NG-A	B	26.7/22.1
L71	6200003640	S.COL MLF1608E 100K-T	T	84.6/25.6
L72	6200003640	S.COL MLF1608E 100K-T	T	81/26.3
L73	6200003640	S.COL MLF1608E 100K-T	B	97.8/31.5
L74	6200003540	S.COL MLF1608D R22K-T	B	101/22.8
L75	6200003540	S.COL MLF1608D R22K-T	B	100.4/19.2
L78	6200004780	S.COL MLF1608A 1R5K-T	T	68.3/19.1
L80	6200003960	S.COL MLF1608A 1R0K-T	B	68.9/9.1
L81	6200004600	S.COL MLF1608D R15K-T	B	70/11.8
L82	6200004600	S.COL MLF1608D R15K-T	B	70.8/9.9
L83	6200008070	S.COL MLF1608E 6R8K 6.8U except [AUS]	B	63.2/25.4
L84	6200004920	S.COL MLF1608A 2R2K-T	B	99.2/23.5
L85	6200003540	S.COL MLF1608D R22K-T	B	84.5/10.7
L86	6200003540	S.COL MLF1608D R22K-T	B	81.6/10.4
R2	7030000220	S.RES MCR10EZHJ 47 (470)	B	18.7/21.1
R3	7030005090	S.RES ERJ2GEJ 104 X (100 k)	B	56.1/9.5
R4	7030005090	S.RES ERJ2GEJ 104 X (100 k)	B	56.1/8.2
R5	7030005060	S.RES ERJ2GEJ 333 X (33 k)	B	50.3/8.2
R6	7030005060	S.RES ERJ2GEJ 333 X (33 k)	B	14.5/15.1
R7	7030008280	S.RES ERJ2GEJ 271 X (270)	B	16.1/19.2
R8	7030008280	S.RES ERJ2GEJ 271 X (270)	B	16.1/18.2
R9	7030005240	S.RES ERJ2GEJ 473 X (47 k)	B	15.7/23.1
R10	7030005050	S.RES ERJ2GEJ 103 X (10 k)	B	14.2/19.2
R11	7030005040	S.RES ERJ2GEJ 472 X (4.7 k)	B	51.6/10.2
R12	7030005240	S.RES ERJ2GEJ 473 X (47 k)	B	54.9/8.2
R13	7030005070	S.RES ERJ2GEJ 683 X (68 k)	B	54.3/9.5
R14	7030005220	S.RES ERJ2GEJ 223 X (22 k)	T	33.2/19.8
R15	7030009200	S.RES ERJ2GEJ 390 X (39)	T	32.9/16.7
R16	7030005060	S.RES ERJ2GEJ 333 X (33 k)	T	31.9/16.7
R17	7030009290	S.RES ERJ2GEJ 562 X (5.6 k)	T	39.3/18.3
R18	7030004990	S.RES ERJ2GEJ 221 X (220)	T	39.6/15.1
R19	7510001661	S.TMR NTCG16 4LH 473JT	T	41/16.1
R20	7030000230	S.RES MCR10EZHJ 56 (560)	T	49.9/14.4
R21	7030005120	S.RES ERJ2GEJ 102 X (1 k)	T	49.2/10.7
R22	7030007290	S.RES ERJ2GEJ 222 X (2.2 k)	T	47.8/13.9
R23	7030005040	S.RES ERJ2GEJ 472 X (4.7 k)	B	50.9/6.4
R24	7030005220	S.RES ERJ2GEJ 223 X (22 k)	T	49.7/7.4
R25	7030005120	S.RES ERJ2GEJ 102 X (1 k)	T	50.7/10.3
R26	7030005090	S.RES ERJ2GEJ 104 X (100 k)	T	50.3/9.4
R27	7030005120	S.RES ERJ2GEJ 102 X (1 k)	T	51.9/14.6
R28	7030004980	S.RES ERJ2GEJ 101 X (100)	T	53/11.8
R29	7030007340	S.RES ERJ2GEJ 153 X (15 k)	T	54.7/13.9
R30	7030005530	S.RES ERJ2GEJ 100 X (10)	T	56/14.2
R31	7030005220	S.RES ERJ2GEJ 223 X (22 k)	T	57.2/10.4
R32	7030005590	S.RES ERJ2GEJ 680 X (68)	T	58.6/9.1
R33	7030009160	S.RES ERJ2GEJ 181 X (180)	T	59.9/11.5

M.=Mounted side (T: Mounted on the Top side, B: Mounted on the Bottom side)
S.=Surface mount

[RF UNIT]

REF NO.	ORDER NO.	DESCRIPTION	M.	H/V LOCATION
R34	7030005210	S.RES ERJ2GEJ 822 X (8.2 k)	T	61.3/14.3
R35	7030005050	S.RES ERJ2GEJ 103 X (10 k)	T	59.9/9.4
R36	7030005570	S.RES ERJ2GEJ 820 X (82)	T	63.8/12.8
R37	7030005570	S.RES ERJ2GEJ 820 X (82)	T	63.3/14.1
R38	7030005570	S.RES ERJ2GEJ 820 X (82)	T	64.6/14.4
R39	7030005050	S.RES ERJ2GEJ 103 X (10 k)	T	63.1/15.6
R40	7030007300	S.RES ERJ2GEJ 332 X (3.3 k)	B	54.6/1.5
R41	7030008300	S.RES ERJ2GEJ 184 X (180 k)	B	26.7/18.1
R42	7030005000	S.RES ERJ2GEJ 471 X (470)	B	24.1/26.9
R43	7030005110	S.RES ERJ2GEJ 224 X (220 k)	B	28.4/24.4
R44	7030005080	S.RES ERJ2GEJ 823 X (82 k)	B	36.6/21.5
R45	7030005240	S.RES ERJ2GEJ 473 X (47 k)	B	36/22.8
R46	7030005240	S.RES ERJ2GEJ 473 X (47 k)	B	29.2/20
R47	7030005090	S.RES ERJ2GEJ 104 X (100 k)	B	34.9/24.5
R48	7030010010	S.RES ERJ2RKF 334 X (330 k)	B	36/27.6
R49	7030004970	S.RES ERJ2GEJ 470 X (47)	B	40.5/26.2
R51	7030004980	S.RES ERJ2GEJ 101 X (100)	B	37.1/25.9
R52	7030005110	S.RES ERJ2GEJ 224 X (220 k)	B	46.4/23.6
R53	7030005110	S.RES ERJ2GEJ 224 X (220 k)	B	47.3/25.6
R54	7030005110	S.RES ERJ2GEJ 224 X (220 k)	B	50.2/25.1
R58	7030005110	S.RES ERJ2GEJ 224 X (220 k)	B	53.8/25.9
R61	7030005050	S.RES ERJ2GEJ 103 X (10 k)	B	60/19.6
R63	7030004980	S.RES ERJ2GEJ 101 X (100)		
		except [AUS]	B	57.1/21.1
	7030007270	S.RES ERJ2GEJ 151 X (150) [AUS]	B	57.1/21.1
R64	7030004980	S.RES ERJ2GEJ 101 X (100)	B	63.5/22.4
R65	7030005000	S.RES ERJ2GEJ 471 X (470)	B	60.1/24.5
R68	7030008290	S.RES ERJ2GEJ 183 X (18 k)	T	70.1/12.6
R69	7030005120	S.RES ERJ2GEJ 102 X (1 k)	T	68.3/12.6
R70	7030005030	S.RES ERJ2GEJ 152 X (1.5 k)	T	70.8/15.4
R71	7030007570	S.RES ERJ2GEJ 122 X (1.2 k)	B	63.3/3.9
R72	7030005000	S.RES ERJ2GEJ 471 X (470)	B	68.9/2.2
R73	7030005600	S.RES ERJ2GEJ 273 X (27 k)	B	73/2.2
R74	7030005090	S.RES ERJ2GEJ 104 X (100 k)	B	75.5/4.9
R75	7030005120	S.RES ERJ2GEJ 102 X (1 k)	B	75.3/6.7
R77	7030007290	S.RES ERJ2GEJ 222 X (2.2 k)	B	103.4/7.3
R78	7030005080	S.RES ERJ2GEJ 823 X (82 k)	B	40.3/20.9
R80	7030005110	S.RES ERJ2GEJ 224 X (220 k) [AUS]	B	107.3/7.1
	7030009290	S.RES ERJ2GEJ 562 X (5.6 k)		
		except [AUS]	B	107.3/7.1
R81	7030005030	S.RES ERJ2GEJ 152 X (1.5 k)	T	75.8/10
R82	7030004980	S.RES ERJ2GEJ 101 X (100)	T	78.4/9
R83	7030005220	S.RES ERJ2GEJ 223 X (22 k)	B	77.5/4.9
R84	7030005600	S.RES ERJ2GEJ 273 X (27 k)	B	76.5/6.7
R86	7030005030	S.RES ERJ2GEJ 152 X (1.5 k)	B	79.3/4.9
R87	7030010040	S.RES ERJ2GEJ-JPW	B	83.8/7.4
R88	7030005070	S.RES ERJ2GEJ 683 X (68 k)	B	83.8/9.2
R89	7030005600	S.RES ERJ2GEJ 273 X (27 k)	B	87.5/6.7
R90	7030005120	S.RES ERJ2GEJ 102 X (1 k)	B	87.3/9.6
R91	7030008370	S.RES ERJ2GEJ 561 X (560)	B	85.7/6.2
R92	7030005720	S.RES ERJ2GEJ 563 X (56 k)	B	94.4/6
R94	7030004980	S.RES ERJ2GEJ 101 X (100)	B	92.3/4.4
R95	7030005110	S.RES ERJ2GEJ 224 X (220 k)	B	96.7/10.6
R96	7030005720	S.RES ERJ2GEJ 563 X (56 k)	B	95.7/10.6
R97	7030005040	S.RES ERJ2GEJ 472 X (4.7 k)	B	95.4/4.8
R98	7030005290	S.RES ERJ2GEJ 682 X (6.8 k)		
		except [AUS]	B	99.8/7.5
	7030007300	S.RES ERJ2GEJ 332 X (3.3 k) [AUS]	B	99.8/7.5
R99	7030005240	S.RES ERJ2GEJ 473 X (47 k)	B	98.5/8.2
R100	7030005700	S.RES ERJ2GEJ 274 X (270 k)	B	97.7/11.6
R101	7030005230	S.RES ERJ2GEJ 334 X (330 k)	B	99.8/8.5
R102	7030005090	S.RES ERJ2GEJ 104 X (100 k)	B	101.4/9.8
R103	7030000190	S.RES MCR10EZHJ 27 (270)	B	109.3/32.4
R104	7030000190	S.RES MCR10EZHJ 27 (270)	B	107.5/32.4
R106	7030005090	S.RES ERJ2GEJ 104 X (100 k)	B	18.1/10
R107	7030000280	S.RES MCR10EZHJ 150 (151)	B	88.7/35
R108	7030000170	S.RES MCR10EZHJ 18 (180)	B	99/38.4
R109	7030005050	S.RES ERJ2GEJ 103 X (10 k)	B	97.9/35.8
R111	7030005050	S.RES ERJ2GEJ 103 X (10 k)	B	64.6/18.6
R114	7030008280	S.RES ERJ2GEJ 271 X (270)	B	71.4/16.4
R115	7030005220	S.RES ERJ2GEJ 223 X (22 k)	B	72.8/17.8
R116	7030004970	S.RES ERJ2GEJ 470 X (47)	T	77.6/14.9
R117	7030007570	S.RES ERJ2GEJ 122 X (1.2 k)	T	79.9/15.3
R118	7030005300	S.RES ERJ2GEJ 150 X (15)	T	78.9/15.3
R119	7030005000	S.RES ERJ2GEJ 471 X (470)	B	82/17.8
R120	7030005720	S.RES ERJ2GEJ 563 X (56 k)	B	82.5/16.5
R121	7030005000	S.RES ERJ2GEJ 471 X (470)	B	83.6/17.7
R130	7030007290	S.RES ERJ2GEJ 222 X (2.2 k)	T	95.7/17.8
R133	7030005220	S.RES ERJ2GEJ 223 X (22 k)	B	83.3/28.8
R134	7030005120	S.RES ERJ2GEJ 102 X (1 k)	B	87/27.8
R135	7030008370	S.RES ERJ2GEJ 561 X (560)	B	92.3/26.9
R139	7030005530	S.RES ERJ2GEJ 100 X (10)	B	42.1/34.4
R140	7030010040	S.RES ERJ2GEJ-JPW	B	43.5/30.3
R142	7030000010	S.RES MCR10EZHJ JPW (000)	T	52.3/29.5
R145	7030005290	S.RES ERJ2GEJ 682 X (6.8 k)	T	58.2/36.7
R146	7030010040	S.RES ERJ2GEJ-JPW	B	54.9/36.7
R147	7030008010	S.RES ERJ2GEJ 123 X (12 k)	T	59.7/37.7
R148	7030005120	S.RES ERJ2GEJ 102 X (1 k)	T	61/35.2
R149	7030005050	S.RES ERJ2GEJ 103 X (10 k)	T	60.9/31.6
R150	7030005090	S.RES ERJ2GEJ 104 X (100 k)	T	57.6/31.1
R153	7030005160	S.RES ERJ2GEJ 105 X (1 M)	B	59.9/6.5
R154	7030005160	S.RES ERJ2GEJ 105 X (1 M)	B	61.1/10.5
R155	7030005160	S.RES ERJ2GEJ 105 X (1 M)	B	62.9/10.5
R160	7030005240	S.RES ERJ2GEJ 473 X (47 k)	T	108.8/21.1
R161	7030005720	S.RES ERJ2GEJ 563 X (56 k)	T	105.4/18.8
R162	7030005090	S.RES ERJ2GEJ 104 X (100 k)	T	103.5/14.9
R163	7030005090	S.RES ERJ2GEJ 104 X (100 k)	T	107.4/18.8
R181	7030008280	S.RES ERJ2GEJ 271 X (270)	B	110.5/25.4
R182	7030003400	S.RES ERJ3GEYJ 471 V (470)	B	110.9/27.2
R184	7030010040	S.RES ERJ2GEJ-JPW	B	110.6/30.4
R187	7030005120	S.RES ERJ2GEJ 102 X (1 k)	B	111.3/28.8
R188	7030005580	S.RES ERJ2GEJ 560 X (56)	B	106.1/27
R189	7030005120	S.RES ERJ2GEJ 102 X (1 k)	B	104.9/29.5
R192	7030010010	S.RES ERJ2RKF 334 X (330 k)	T	98.6/34.2

[RF UNIT]

REF NO.	ORDER NO.	DESCRIPTION	M.	H/V LOCATION
R193	7030010020	S.RES ERJ2RKF 154 X (150 k)	T	97.3/34
R194	7030010010	S.RES ERJ2RKF 334 X (330 k)	T	10.7/9.3
R195	7030010020	S.RES ERJ2RKF 154 X (150 k)	T	10.7/7.2
R196	7030000160	S.RES MCR10EZHJ 15 (150)	B	105.7/32.5
R197	7030000170	S.RES MCR10EZHJ 18 (180)	B	104/32.5
R201	7030005090	S.RES ERJ2GEJ 104 X (100 k)	B	94.8/29
R210	7030005120	S.RES ERJ2GEJ 102 X (1 k)	B	54.9/35.1
R211	7030006610	S.RES ERJ2GEJ 394 X (390 k)	B	109.1/10.9
R212	7030005240	S.RES ERJ2GEJ 473 X (47 k)	T	107/10.2
R213	7030007350	S.RES ERJ2GEJ 393 X (39 k)	T	106.6/8.9
R214	7030005090	S.RES ERJ2GEJ 104 X (100 k)	T	105.1/10.2
R215	7030005170	S.RES ERJ2GEJ 474 X (470 k)	T	103.8/10.5
R216	7030005240	S.RES ERJ2GEJ 473 X (47 k)	T	104.6/8.9
R217	7030005240	S.RES ERJ2GEJ 473 X (47 k)	T	111.3/8.8
R218	7030005240	S.RES ERJ2GEJ 473 X (47 k)	T	110/9.3
R219	7030000070	S.RES MCR10EZHJ 2.7 (2R7)	T	32.2/13.1
R220	7030005000	S.RES ERJ2GEJ 471 X (470)	B	53.7/40.9
R222	7030005110	S.RES ERJ2GEJ 224 X (220 k)	B	57.7/38
R223	7030005050	S.RES ERJ2GEJ 103 X (10 k)	B	52.7/40.4
R224	7030005060	S.RES ERJ2GEJ 333 X (33 k)	B	49.6/38.9
R225	7030005220	S.RES ERJ2GEJ 223 X (22 k)	B	86/33.9
R226	7030003680	S.RES ERJ3GEYJ 104 V (100 k)	B	91.2/34.2
R227	7030005120	S.RES ERJ2GEJ 102 X (1 k)	B	94.8/34.2
R228	7030005050	S.RES ERJ2GEJ 103 X (10 k)	T	96/4.4
R231	7030010040	S.RES ERJ2GEJ-JPW	T	103.6/6.8
R232	7030003800	S.RES ERJ3GEYJ 105 V (1 M)	T	92.8/2.5
R233	7030010040	S.RES ERJ2GEJ-JPW	B	35.5/31
R234	7030005090	S.RES ERJ2GEJ 104 X (100 k)	T	94/10.5
R235	7030005170	S.RES ERJ2GEJ 474 X (470 k)	T	91.1/7
R236	7030005840	S.RES RR0510R-473-D (47 k)	T	88.4/9.5
R237	7030005840	S.RES RR0510R-473-D (47 k)	T	90.6/11.4
R242	7030005240	S.RES ERJ2GEJ 473 X (47 k)	T	110.5/11.9
R243	7030005000	S.RES ERJ2GEJ 471 X (470)	B	109.7/12
R244	7030005120	S.RES ERJ2GEJ 102 X (1 k)	T	105.4/19.8
R245	7030005120	S.RES ERJ2GEJ 102 X (1 k)	T	105/21.1
R246	7030005030	S.RES ERJ2GEJ 152 X (1.5 k)	T	105.9/21.1
R247	7030005240	S.RES ERJ2GEJ 473 X (47 k)	T	111.4/14.4
R248	7030005220	S.RES ERJ2GEJ 223 X (22 k)	T	34.5/22.5
R249	7030005220	S.RES ERJ2GEJ 223 X (22 k)	T	34.1/20.7
R250	7030005530	S.RES ERJ2GEJ 100 X (10)	T	57.6/11.7
R251	7030005160	S.RES ERJ2GEJ 105 X (1 M)	B	92.3/27.8
R252	7030010040	S.RES ERJ2GEJ-JPW	B	95.7/23.9
R253	7030010040	S.RES ERJ2GEJ-JPW	B	92.3/26
R254	7030005040	S.RES ERJ2GEJ 472 X (4.7 k)	T	85.1/15.5
R256	7030008370	S.RES ERJ2GEJ 561 X (560)	T	79.5/22.2
R258	7030005220	S.RES ERJ2GEJ 223 X (22 k)	T	76.9/24.7
R260	7030005220	S.RES ERJ2GEJ 223 X (22 k)	T	85.4/19.1
R262	7030008370	S.RES ERJ2GEJ 561 X (560)	T	84.1/19.3
R265	7030005000	S.RES ERJ2GEJ 471 X (470)	T	80.5/17.9
R266	7030005070	S.RES ERJ2GEJ 683 X (68 k)	T	78.6/18.9
R267	7030009290	S.RES ERJ2GEJ 562 X (5.6 k)	B	82.1/4.7
R268	7030009290	S.RES ERJ2GEJ 562 X (5.6 k)	B	80.8/4.3
R269	7030009290	S.RES ERJ2GEJ 562 X (5.6 k)	T	69.8/18.7
R270	7030008290	S.RES ERJ2GEJ 183 X (18 k)	T	70.8/14.1
R271	7030005040	S.RES ERJ2GEJ 472 X (4.7 k)	B	41.6/26.2
R272	7030005040	S.RES ERJ2GEJ 472 X (4.7 k)	B	43.6/26.2
R273	7030005040	S.RES ERJ2GEJ 472 X (4.7 k)	B	44.6/26.2
R274	7030010040	S.RES ERJ2GEJ-JPW	B	71.3/2.2
R275	7030005000	S.RES ERJ2GEJ 471 X (470)	B	107.7/27
R280	7030004980	S.RES ERJ2GEJ 101 X (100)	B	85.6/18.6
R281	7030004980	S.RES ERJ2GEJ 101 X (100)	B	85.6/19.5
R282	7030004980	S.RES ERJ2GEJ 101 X (100)	B	85.6/20.4
R283	7030005210	S.RES ERJ2GEJ 822 X (8.2 k)	T	100.8/11.5
R285	7030005240	S.RES ERJ2GEJ 473 X (47 k)	B	112.6/19
R290	7030004980	S.RES ERJ2GEJ 101 X (100)	B	79.3/9.3
R291	7030004980	S.RES ERJ2GEJ 101 X (100)	B	88.6/9.3
R293	7030010010	S.RES ERJ2RKF 334 X (330 k)	B	35.1/26.7
R294	7030005120	S.RES ERJ2GEJ 102 X (1 k)	T	103.9/13.6
R295	7030010010	S.RES ERJ2RKF 334 X (330 k)	B	60.9/5.7
R296	7030010010	S.RES ERJ2RKF 334 X (330 k)	B	63.9/6.2
R297	7030005050	S.RES ERJ2GEJ 103 X (10 k)	B	33.9/26
R306	7030005600	S.RES ERJ2GEJ 273 X (27 k)	B	63.5/5.2
R307	7030005070	S.RES ERJ2GEJ 683 X (68 k)	B	65.2/5.8
R308	7510001661	S.TMR NTCG16 4LH 473JT	B	66.3/6.2
R309	7030007290	S.RES ERJ2GEJ 222 X (2.2 k)	B	42.9/23.2
R313	7030010040	S.RES ERJ2GEJ-JPW	B	75.3/14.6
R315	7030000010	S.RES MCR10EZHJ JPW (000)	B	66.3/26.6
R316	7030005220	S.RES ERJ2GEJ 223 X (22 k)	T	100.9/13.5
R317	7030005240	S.RES ERJ2GEJ 473 X (47 k)	T	98.4/13.1
R318	7030010040	S.RES ERJ2GEJ-JPW	T	99.7/12.6
R319	7510001661	S.TMR NTCG16 4LH 473JT	T	102/13.9
R320	7030007300	S.RES ERJ2GEJ 332 X (3.3 k)	T	30.9/16
R321	7510001661	S.TMR NTCG16 4LH 473JT	T	29.2/16.1
R322	7030005600	S.RES ERJ2GEJ 273 X (27 k)	T	30.6/17.6
R323	7030009140	S.RES ERJ2GEJ 272 X (2.7 k)	T	30.1/18.9
R325	7030010040	S.RES ERJ2GEJ-JPW	B	88.9/14.7
R326	7030005090	S.RES ERJ2GEJ 104 X (100 k)	T	58.2/17.4
R327	7030005030	S.RES ERJ2GEJ 152 X (1.5 k)	T	59.2/18.4
R328	7510001541	S.TMR NTCG16 4BH 332JT	T	60.3/16
R329	7510001541	S.TMR NTCG16 4BH 332JT	T	60.3/17.3
R330	7030004980	S.RES ERJ2GEJ 101 X (100)	T	60.8/18.4
R331	7030008310	S.RES ERJ2GEJ 564 X (560 k)	T	42.4/15.4
R332	7030010040	S.RES ERJ2GEJ-JPW	T	42.4/16.4
R333	7030005720	S.RES ERJ2GEJ 563 X (56 k)	T	39.7/17.1
R335	7030004980	S.RES ERJ2GEJ 101 X (100)		
		except [AUS]	B	57.1/22
	7030007270	S.RES ERJ2GEJ 151 X (150) [AUS]	B	57.1/22
R336	7030005590	S.RES ERJ2GEJ 680 X (68)		
		except [AUS]	B	58.3/21.6
	7030009200	S.RES ERJ2GEJ 390 X (39) [AUS]	B	58.3/21.6
R337	7030005590	S.RES ERJ2GEJ 680 X (68)	B	73.1/9.4
R338	7030010040	S.RES ERJ2GEJ-JPW	T	49.8/18.2
R339	7030010040	S.RES ERJ2GEJ-JPW	B	88.3/19.3
R340	7030010040	S.RES ERJ2GEJ-JPW	B	88.3/20.2

M.=Mounted side (T: Mounted on the Top side, B: Mounted on the Bottom side)
S.=Surface mount

[RF UNIT]

REF NO.	ORDER NO.	DESCRIPTION	M.	H/V LOCATION
R341	7030010040	S.RES ERJ2GEJ-JPW	B	88.3/21.4
R342	7030011140	S.RES ERJ8GEYJ 0R00V	B	81.9/31.9
R343	7030011140	S.RES ERJ8GEYJ 0R00V	B	81.5/21.9
R344	7030003860	S.RES ERJ3GE JPW V	B	83.7/24.8
R345	7030003860	S.RES ERJ3GE JPW V	B	86.9/13.2
R346	7030003860	S.RES ERJ3GE JPW V	B	89.3/16.8
R347	7030005530	S.RES ERJ2GEJ 100 X (10)	B	38.7/25
R348	7030000010	S.RES MCR10EZHJ JPW (000)	B	111.4/35.5
R349	7030000380	S.RES MCR10EZHJ 1 k	B	39.9/37.5
C3	4030007050	S.CER C1608 CH 1H 220J-T	T	14/32.2
C4	4030006980	S.CER C1608 CH 1H 070D-T	T	18.5/34.9
C5	4030007060	S.CER C1608 CH 1H 270J-T	T	14.3/29.7
C6	4030006940	S.CER C1608 CH 1H 030C-T	T	16.3/29
C7	4030007040	S.CER C1608 CH 1H 180J-T	T	14.4/27.1
C8	4030006860	S.CER C1608 JB 1H 102K-T	T	16.3/26.3
C9	4030006860	S.CER C1608 JB 1H 102K-T	B	17.9/23.8
C10	4030006860	S.CER C1608 JB 1H 102K-T	T	18.9/21.9
C11	4030009510	S.CER C1608 CH 1H 010B-T	T	16.5/21.9
C12	4030009510	S.CER C1608 CH 1H 010B-T	T	13.9/21.9
C13	4030007030	S.CER C1608 CH 1H 150J-T	T	16.5/20.5
C14	4030007030	S.CER C1608 CH 1H 150J-T	T	15.2/19.2
C15	4030009510	S.CER C1608 CH 1H 010B-T	T	15.8/15.1
C16	4030009500	S.CER C1608 CH 1H 0R5B-T	T	14.2/16.5
C17	4030017330	S.CER ECJ0EF1C104Z	B	49.3/8.2
C19	4030007170	S.CER C1608 CH 1H 221J-T	T	18.1/14.3
C20	4030017460	S.CER ECJ0EB1E102K	B	14.2/20.2
C22	4030007090	S.CER C1608 CH 1H 470J-T	T	22.7/14
C23	4030017460	S.CER ECJ0EB1E102K	B	53.9/8.2
C24	4030006860	S.CER C1608 JB 1H 102K-T	T	27.5/19.2
C25	4030006860	S.CER C1608 JB 1H 102K-T	T	28.9/17.4
C26	4550007650	S.TAN F931V105MAABMA [USA], [UK], [CHN], [A6E], [AUS] only	T	29.3/21.9
C28	4030017460	S.CER ECJ0EB1E102K	B	14.2/18.2
C29	4030017460	S.CER ECJ0EB1E102K	T	46.8/15.3
C30	4030017670	S.CER ECJ0EC1H390J	T	34.1/14.1
C31	4030006860	S.CER C1608 JB 1H 102K-T	T	37.6/17.2
C32	4030017460	S.CER ECJ0EB1E102K	T	39.6/16.1
C33	4030017460	S.CER ECJ0EB1E102K	T	50.8/16
C34	4030017620	S.CER ECJ0EC1H100C	T	41.9/13.4
C35	4030017500	S.CER ECJ0EC1H560J	T	41.9/14.4
C36	4030017460	S.CER ECJ0EB1E102K	T	49.2/12.2
C37	4550006250	S.TAN TEESVA 1A 106M8R [A24/E]	T	52.4/6.3
	4550007260	S.TAN F931C475MAABMA [A6/E]	T	52.4/6.3
C38	4030017460	S.CER ECJ0EB1E102K	T	50.3/8.4
C39	4030017460	S.CER ECJ0EB1E102K	T	53/10.5
C40	4030017600	S.CER ECJ0EC1H080C	T	53/13.6
C41	4030017390	S.CER ECJ0EC1H180J	T	58.1/13
C42	4030017460	S.CER ECJ0EB1E102K	T	60.1/13
C43	4030017670	S.CER ECJ0EC1H390J	T	57/14.6
C44	4030017460	S.CER ECJ0EB1E102K	T	62.9/16.9
C45	4030017460	S.CER ECJ0EB1E102K	T	62.3/13.3
C46	4030017460	S.CER ECJ0EB1E102K	T	59.9/7.9
C47	4030017460	S.CER ECJ0EB1E102K	T	65.1/13.1
C48	4030017460	S.CER ECJ0EB1E102K	T	52.4/2.8
C49	4550002980	S.TAN TEESVA 1C 225M8R	T	52.4/1.3
C50	4550000530	S.TAN TEESVA 1V 104M8R	T	48/3.1
C51	4030017460	S.CER ECJ0EB1E102K	B	54.9/3.3
C52	4030016930	S.CER ECJ0EB1A104K	B	55.5/5.3
C53	4030017400	S.CER ECJ0EC1H220J	T	20.5/27.4
C54	4030017670	S.CER ECJ0EC1H390J	T	22.6/27.4
C55	4030017390	S.CER ECJ0EC1H180J	B	20.7/25.6
C56	4030017460	S.CER ECJ0EB1E102K	B	21.9/23.9
C57	4030017460	S.CER ECJ0EB1E102K	B	27.9/19.5
C58	4030017590	S.CER ECJ0EC1H070C	B	25.1/24.1
C60	4030017670	S.CER ECJ0EC1H390J	B	28.1/25.7
C61	4030017460	S.CER ECJ0EB1E102K	B	62.3/23.7
C62	4030017460	S.CER ECJ0EB1E102K	B	34.7/22.3
C63	4030017460	S.CER ECJ0EB1E102K	B	30.5/19.5
C64	4550003250	S.TAN TEESVA 1V 474M8R [AUS]	B	33.5/18.5
	4550006250	S.TAN TEESVA 1A 106M8R except [AUS]	B	33.5/18.5
C65	4030017460	S.CER ECJ0EB1E102K	B	35.8/24.5
C66	4030017360	S.CER ECJ0EC1H030B	B	42/23.3
C67	4030017460	S.CER ECJ0EB1E102K	B	44.3/22
C68	4030017460	S.CER ECJ0EB1E102K	B	37/25
C69	4030017460	S.CER ECJ0EB1E102K	B	39.5/26.3
C70	4030017340	S.CER ECJ0EC1H010B	B	46.1/22
C72	4030017380	S.CER ECJ0EC1H050B	B	48.8/25.1
C73	4030017350	S.CER ECJ0EC1H020B	B	49.4/22.6
C74	4030017340	S.CER ECJ0EC1H010B	B	50.4/21.3
C75	4030017420	S.CER ECJ0EC1H470J	B	51.2/25.1
C76	4030017380	S.CER ECJ0EC1H050B	B	52.5/24.6
C77	4030017580	S.CER ECJ0EC1H060C	B	54.9/21.6
C78	4030017430	S.CER ECJ0EC1H101J	B	55.4/20.4
C79	4030017430	S.CER ECJ0EC1H101J	B	54.3/24.6
C80	4030017460	S.CER ECJ0EB1E102K	B	59.6/20.8
C81	4030017460	S.CER ECJ0EB1E102K	B	59.2/24.5
C82	4030017460	S.CER ECJ0EB1E102K	B	64.7/22
C83	4030017460	S.CER ECJ0EB1E102K	B	64.7/22.9
C84	4030017460	S.CER ECJ0EB1E102K	B	64.5/21.1
C85	4030017620	S.CER ECJ0EC1H100C	B	62.3/21.9
C86	4030017340	S.CER ECJ0EC1H010B	T	65.4/21
C87	4030017460	S.CER ECJ0EB1E102K	T	69.4/20.8
C88	4030016790	S.CER ECJ0EB1C103K	T	71.4/18.7
C89	4030016790	S.CER ECJ0EB1C103K	T	68.5/16.8
C90	4030016790	S.CER ECJ0EB1C103K	T	69.2/12.6
C91	4030017510	S.CER ECJ0EC1H680J	B	66.5/4
C92	4030017460	S.CER ECJ0EB1E102K	B	67.7/2
C93	4030017460	S.CER ECJ0EB1E102K	B	70.1/1.8
C95	4030016790	S.CER ECJ0EB1C103K	B	74.7/2.2
C96	4030016930	S.CER ECJ0EB1A104K	B	75.6/3.5
C97	4030016790	S.CER ECJ0EB1C103K	T	70.5/11.4

[RF UNIT]

REF NO.	ORDER NO.	DESCRIPTION	M.	H/V LOCATION
C98	4030017460	S.CER ECJ0EB1E102K	B	76.3/8.7
C99	4550007200	S.TAN F930J476MBABMA except [AUS]	B	106/3.5
	4550007620	S.TAN F931V224MAABMA [AUS]	B	106/3.5
C100	4030016790	S.CER ECJ0EB1C103K	T	77.1/9.5
C101	4030017460	S.CER ECJ0EB1E102K	B	78.4/4.9
C102	4550003250	S.TAN TEESVA 1V 474M8R except [AUS]	B	110.3/6.7
	4550007260	S.TAN F931C475MAABMA [AUS]	B	110.3/6.7
C103	4030016930	S.CER ECJ0EB1A104K	B	81.1/6
C104	4030016790	S.CER ECJ0EB1C103K	B	83.1/6
C106	4030016790	S.CER ECJ0EB1C103K	B	86.3/10.4
C107	4030016930	S.CER ECJ0EB1A104K	B	91.5/11.3
C108	4030016790	S.CER ECJ0EB1C103K	B	87.7/8
C109	4030016930	S.CER ECJ0EB1A104K	B	84.4/5.7
C110	4030016930	S.CER ECJ0EB1A104K	B	38.5/26.3
C111	4030016790	S.CER ECJ0EB1C103K	B	94.4/7.8
C112	4030016930	S.CER ECJ0EB1A104K	B	93.4/4.4
C113	4550007200	S.TAN F930J476MBABMA [EUR], [UK], [CHN] only	B	98.5/4.2
C114	4030016790	S.CER ECJ0EB1C103K	B	96.4/5.7
C115	4030011810	S.CER C1608 JB 1A 224K-T	B	101.8/7.6
C116	4030011810	S.CER C1608 JB 1A 224K-T	B	62.1/5.3
C117	4030016930	S.CER ECJ0EB1A104K	B	64.9/7.9
C118	4030017430	S.CER ECJ0EC1H101J	B	64.4/10
C119	4030017460	S.CER ECJ0EB1E102K	B	111.5/33.8
C120	4030017460	S.CER ECJ0EB1E102K	B	100.4/40.1
C121	4510008490	S.ELE EEE1CS100SR	T	100.4/36.8
C125	4030017460	S.CER ECJ0EB1E102K	T	12/9.8
C126	4030006900	S.CER C1608 JB 1H 103K-T	T	11.6/12.8
C127	4030017460	S.CER ECJ0EB1E102K	T	53.2/27.4
C128	4030017460	S.CER ECJ0EB1E102K	B	16.3/5.1
C130	4510008500	S.ELE EEE1CA101WP	T	94.1/38.3
C150	4030017640	S.CER ECJ0EC1H150J	B	68.2/17.6
C151	4030017460	S.CER ECJ0EB1E102K	B	72.8/19
C152	4030017460	S.CER ECJ0EB1E102K	B	71/17.6
C153	4030017460	S.CER ECJ0EB1E102K	B	81.5/16.5
C154	4030017460	S.CER ECJ0EB1E102K	B	81.8/15.2
C155	4030017660	S.CER ECJ0EC1H330J	T	77.5/16.5
C156	4030017460	S.CER ECJ0EB1E102K	B	85.2/17.7
C168	4550000560	S.TAN TEESVA 1V 334M8R	B	85.1/29.1
C169	4550002980	S.TAN TEESVA 1C 225M8R	B	89.4/28.4
C171	4030017460	S.CER ECJ0EB1E102K	B	71.9/17.6
C172	4030017460	S.CER ECJ0EB1E102K	T	92.9/19.7
C173	4550006220	S.TAN TEESVA 0J 156M8R	T	94.4/21.3
C174	4030017460	S.CER ECJ0EB1E102K	T	95.9/16.5
C176	4030016930	S.CER ECJ0EB1A104K	T	11.7/7.2
C179	4030016930	S.CER ECJ0EB1A104K	B	85.6/23.4
C180	4030016930	S.CER ECJ0EB1A104K	T	96.4/34
C181	4030016930	S.CER ECJ0EB1A104K	B	40.3/32.9
C182	4030017400	S.CER ECJ0EC1H220J	B	43.5/32.2
C183	4550007260	S.TAN F931C475MAABMA [USA], [EUR], [CHN], [A6E], [AUS] only	B	41.9/31.5
C184	4510008500	S.ELE EEE1CA101WP	T	42.7/37.1
C185	4550007260	S.TAN F931C475MAABMA [USA], [EUR], [CHN], [A6E], [AUS] only	B	53.4/35.2
C186	4030017460	S.CER ECJ0EB1E102K	T	59.9/36.7
C187	4030017460	S.CER ECJ0EB1E102K	T	61/34
C188	4550007260	S.TAN F931C475MAABMA [USA], [EUR], [CHN], [A6E], [AUS] only	T	59.4/31.2
C190	4030017460	S.CER ECJ0EB1E102K	B	29.1/26.2
C191	4030017460	S.CER ECJ0EB1E102K	B	47.3/27.4
C192	4030017460	S.CER ECJ0EB1E102K	B	49.3/26.4
C193	4030017460	S.CER ECJ0EB1E102K	B	52.8/25.9
C195	4510008500	S.ELE EEE1CA101WP	T	47.2/30.5
C196	4030017460	S.CER ECJ0EB1E102K	T	57.2/41
C197	4030016790	S.CER ECJ0EB1C103K	B	109.1/10
C201	4030017400	S.CER ECJ0EC1H220J	B	65.5/4
C202	4030017490	S.CER C1608 JB 1A 105K-T	T	103.9/18.5
C203	4030017640	S.CER ECJ0EC1H150J	T	71.9/24.4
C210	4030007050	S.CER C1608 CH 1H 220J-T	T	13.3/34.1
C211	4030006980	S.CER C1608 CH 1H 070D-T	T	17.6/36.8
C212	4030007080	S.CER C1608 CH 1H 390J-T	T	15.5/13.6
C220	4030017460	S.CER ECJ0EB1E102K	B	93.9/29
C221	4510008500	S.ELE EEE1CA101WP	T	38.1/27.9
C222	4030017460	S.CER ECJ0EB1E102K	T	56.9/9.1
C223	4030017490	S.CER C1608 JB 1A 105K-T	B	56.1/35.6
C224	4550007260	S.TAN F931C475MAABMA [USA], [EUR], [CHN], [A6E], [AUS] only	T	110.4/19.3
C225	4550007260	S.TAN F931C475MAABMA [USA], [EUR], [CHN], [A6E], [AUS] only	T	112.5/19
C226	4030017760	S.CER ECJ0EB1H222K [AUS]	T	110/8.1
	4030017770	S.CER ECJ0EB1E332K except [AUS]	T	110/8.1
C227	4030017780	S.CER ECJ0EB1E472K [AUS]	T	109.8/10.2
	4030018240	S.CER ECJ0EB1E562K except [AUS]	T	109.8/10.2
C228	4030017720	S.CER ECJ0EB1H331K [AUS]	T	108.6/8.9
	4030018140	S.CER ECJ0EB1H391K except [AUS]	T	108.6/8.9
C229	4030017750	S.CER ECJ0EB1E122K	B	80.2/9
C230	4030017750	S.CER ECJ0EB1E122K	B	90.6/7.4
C231	4030017460	S.CER ECJ0EB1E102K	B	92.9/11.1
C234	4030017460	S.CER ECJ0EB1E102K	B	21.8/18.6
C235	4030017460	S.CER ECJ0EB1E102K	B	25.1/26.9
C237	4030017460	S.CER ECJ0EB1E102K	B	55.7/40.9
C238	4550005980	S.TAN TEESVA 1A 475M8R	B	51.2/39.3
C239	4030016950	S.CER ECJ0EB1A473K	B	57.7/39
C240	4030017460	S.CER ECJ0EB1E102K	B	54.7/40.9
C241	4030017460	S.CER ECJ0EB1E102K	B	53/38.6
C242	4030016790	S.CER ECJ0EB1C103K	B	82.4/33.9
C243	4030017460	S.CER ECJ0EB1E102K	B	45.8/38.7
C244	4030016780	S.CER ECJ0EB1C153K	B	84.2/33.9
C245	4030017780	S.CER ECJ0EB1E472K	B	90.1/34.5
C246	4030017460	S.CER ECJ0EB1E102K	T	105.6/6.7
C247	4550006250	S.TAN TEESVA 1A 106M8R	T	107.3/4.5
C249	4030017460	S.CER ECJ0EB1E102K	T	41.9/18.5

M.=Mounted side (T: Mounted on the Top side, B: Mounted on the Bottom side)
S.=Surface mount

[RF UNIT]

REF NO.	ORDER NO.	DESCRIPTION	M.	H/V LOCATION
C250	4550006250	S.TAN TEESVA 1A 106M8R	B	47.5/36.8
C251	4030016930	S.CER ECJ0EB1A104K	T	92.8/8.2
C253	4030016930	S.CER ECJ0EB1A104K	T	94.3/3.4
C254	4030016930	S.CER ECJ0EB1A104K	T	97.1/5
C255	4030016930	S.CER ECJ0EB1A104K	T	95.1/2.1
C256	4550007260	S.TAN F931C475MAABMA [USA], [EUR], [CHN], [A6E], [AUS] only	T	87.6/6.4
C257	4030017760	S.CER ECJ0EB1H222K	T	96.1/2.6
C258	4030017790	S.CER ECJ0EB1E682K [AUS]	T	110.5/14.1
	4030018090	S.CER ECJ0EB1C822K except [AUS]	T	110.5/14.1
C259	4030016930	S.CER ECJ0EB1A104K	T	95.8/10.5
C260	4030016790	S.CER ECJ0EB1C103K	B	113.1/21.5
C261	4030017690	S.CER ECJ0EC1H121J [AUS]	T	110.5/15.9
	4030017700	S.CER ECJ0EC1H151J except [AUS]	T	110.5/15.9
C262	4030017460	S.CER ECJ0EB1E102K	B	101.7/30.5
C263	4030017460	S.CER ECJ0EB1E102K	B	69.8/36.5
C264	4030017460	S.CER ECJ0EB1E102K	T	73.8/35.4
C269	4030017460	S.CER ECJ0EB1E102K	T	73.1/32.8
C270	4030017460	S.CER ECJ0EB1E102K	B	69.8/33.8
C271	4030017460	S.CER ECJ0EB1E102K	B	69.8/34.7
C272	4030017460	S.CER ECJ0EB1E102K	T	73.2/36.4
C273	4030017460	S.CER ECJ0EB1E102K	B	69.8/35.6
C274	4030017460	S.CER ECJ0EB1E102K	B	62.6/37.3
C276	4030017460	S.CER ECJ0EB1E102K	B	61/35.4
C278	4030017460	S.CER ECJ0EB1E102K	B	61/33.5
C279	4030017460	S.CER ECJ0EB1E102K	B	61.9/32.4
C280	4030017460	S.CER ECJ0EB1E102K	B	61.4/31.5
C281	4030017460	S.CER ECJ0EB1E102K	B	66/32
C282	4030017460	S.CER ECJ0EB1E102K	B	65.6/33
C283	4030017460	S.CER ECJ0EB1E102K	B	66/34
C284	4030017460	S.CER ECJ0EB1E102K	B	65.6/35
C287	4030017460	S.CER ECJ0EB1E102K	T	73.8/37.4
C288	4030017460	S.CER ECJ0EB1E102K	B	65.4/39
C289	4030017460	S.CER ECJ0EB1E102K	B	66/38
C291	4030017460	S.CER ECJ0EB1E102K	B	69.9/37.4
C292	4030017460	S.CER ECJ0EB1E102K	B	71.3/39.2
C293	4030017460	S.CER ECJ0EB1E102K	T	107.6/8.9
C294	4030017460	S.CER ECJ0EB1E102K	T	105.6/8.9
C295	4030017460	S.CER ECJ0EB1E102K	T	107.8/19.8
C296	4030017460	S.CER ECJ0EB1E102K	T	34.1/21.6
C297	4030007160	S.CER C1608 CH 1H 181J-T	T	19.4/8.7
C299	4030007090	S.CER C1608 CH 1H 470J-T	T	24.7/7.9
C301	4030017460	S.CER ECJ0EB1E102K	T	81/16.4
C302	4030017440	S.CER ECJ0EC1H221J	T	79.9/23.7
C306	4030017600	S.CER ECJ0EC1H080C	T	76.5/27.3
C307	4030017600	S.CER ECJ0EC1H080C except [AUS]	T	83.7/28.4
	4030017670	S.CER ECJ0EC1H390J [AUS]	T	83.7/28.4
C308	4030017460	S.CER ECJ0EB1E102K	T	76.6/20.1
C309	4030017460	S.CER ECJ0EB1E102K	T	85.8/16.8
C310	4030017600	S.CER ECJ0EC1H080C	T	78.7/24.7
C311	4030017650	S.CER ECJ0EC1H270J	T	85.7/22.6
C312	4030017460	S.CER ECJ0EB1E102K	T	76.6/21.1
C313	4030017460	S.CER ECJ0EB1E102K	T	84.8/16.8
C315	4030017650	S.CER ECJ0EC1H270J	T	82.3/22.3
C316	4030017550	S.CER ECJ0EC1H1R5B	T	80.6/22.2
C317	4030017550	S.CER ECJ0EC1H1R5B	T	82.5/20.8
C318	4030017530	S.CER ECJ0EC1H0R5B	T	78.9/20.2
C319	4030017460	S.CER ECJ0EB1E102K	T	78.6/17.9
C320	4030016930	S.CER ECJ0EB1A104K	B	83.3/4.8
C321	4030016930	S.CER ECJ0EB1A104K	B	80.8/2.4
C323	4030016790	S.CER ECJ0EB1C103K	B	61/24.5
C324	4030017590	S.CER ECJ0EC1H070C	B	44.1/23.3
C325	4030017460	S.CER ECJ0EB1E102K	B	42.6/26.2
C326	4030017460	S.CER ECJ0EB1E102K	B	41.7/27.5
C329	4030017460	S.CER ECJ0EB1E102K	B	29.5/21.1
C330	4030016930	S.CER ECJ0EB1A104K	T	102.5/11.6
C331	4030018860	S.CER ECJ0EB0J105K	T	103.8/21.3
C333	4030017460	S.CER ECJ0EB1E102K	B	20.5/2.1
C334	4030017460	S.CER ECJ0EB1E102K	B	34.4/1.6
C335	4030017600	S.CER ECJ0EC1H080C except [AUS]	T	87.5/22.5
	4030017670	S.CER ECJ0EC1H390J [AUS]	T	87.5/22.5
C336	4030017460	S.CER ECJ0EB1E102K	T	85/28.1
C337	4030017460	S.CER ECJ0EB1E102K	T	85.5/24.2
C338	4030017640	S.CER ECJ0EC1H150J	T	76.2/26
C339	4030017640	S.CER ECJ0EC1H150J	T	76.4/28.6
C340	4030017440	S.CER ECJ0EC1H221J	T	78.3/28.8
C342	4030017460	S.CER ECJ0EB1E102K	B	91.2/15.7
C347	4030016930	S.CER ECJ0EB1A104K	B	79.5/11.1
C348	4030016930	S.CER ECJ0EB1A104K	B	89.3/6.7
C350	4030011600	S.CER C1608 JB 1E 104K-T	T	37.4/15.5
C351	4030009000	S.CER C2012 JB 1C 224K-T	B	49.6/10.7
C352	4030018890	S.CER ECJ0EB0J224K	B	52.9/10.5
C354	4030012600	S.CER C2012 JB 1A 105M-T	B	88.9/11.9
C355	4030012600	S.CER C2012 JB 1A 105M-T	B	94.3/10.6
C356	4030012600	S.CER C2012 JB 1A 105M-T	B	77.9/10.3
C357	4030016930	S.CER ECJ0EB1A104K	B	76.5/4.9
C359	4030017460	S.CER ECJ0EB1E102K	B	98.1/18.6
C360	4030017460	S.CER ECJ0EB1E102K	B	99.2/30.5
C361	4030017460	S.CER ECJ0EB1E102K	B	43.7/27.5
C362	4030017400	S.CER ECJ0EC1H220J	T	91.1/6
C363	4030016790	S.CER ECJ0EB1C103K	T	87.4/9.5
C364	4030017460	S.CER ECJ0EB1E102K	B	35.2/21
C365	4030017460	S.CER ECJ0EB1E102K except [AUS]	B	35.5/25.8
	4030018860	S.CER ECJ0EB0J105K [AUS]	B	35.5/25.8
C366	4030017690	S.CER ECJ0EC1H121J	B	98.1/22.5
C367	4030017410	S.CER ECJ0EC1H240J	B	99.9/22.1
C368	4030017700	S.CER ECJ0EC1H151J	B	100.4/20.9
C369	4030017610	S.CER ECJ0EC1H090C	B	99.3/19
C370	4030017680	S.CER ECJ0EC1H820J	B	99.2/20.7
C381	4030017460	S.CER ECJ0EB1E102K	B	68.1/24
C382	4030017460	S.CER ECJ0EB1E102K	B	84.5/23.4
C383	4030016930	S.CER ECJ0EB1A104K	B	92.5/16
C384	4030016970	S.CER ECJ0EB1C223K	T	22/4.7
C385	4030016970	S.CER ECJ0EB1C223K	T	33.1/1.2

[RF UNIT]

REF NO.	ORDER NO.	DESCRIPTION	M.	H/V LOCATION
C387	4030018860	S.CER ECJ0EB0J105K	T	58.6/16.1
C390	4030017400	S.CER ECJ0EC1H220J	B	66.8/8.5
C391	4030017460	S.CER ECJ0EB1E102K	B	74.4/9.9
C392	4030017690	S.CER ECJ0EC1H121J	B	69.1/13.2
C393	4030017710	S.CER ECJ0EC1H181J	B	71.8/12.4
C394	4030017690	S.CER ECJ0EC1H121J	B	71.8/9.8
C395	4030017460	S.CER ECJ0EB1E102K	B	87.1/16.8
C396	4030016930	S.CER ECJ0EB1A104K	B	98.3/20.8
C398	4030017680	S.CER ECJ0EC1H820J	B	85.2/12.1
C399	4030017410	S.CER ECJ0EC1H240J	B	84/11.7
C400	4030017700	S.CER ECJ0EC1H151J	B	82.8/11.9
C401	4030017610	S.CER ECJ0EC1H090C	B	81.6/11.4
C402	4030017680	S.CER ECJ0EC1H820J	B	80.4/11.9
C403	4030017460	S.CER ECJ0EB1E102K	B	98.4/33
C404	4030017460	S.CER ECJ0EB1E102K	B	97.1/33
C405	4030017460	S.CER ECJ0EB1E102K	B	75.1/19.8
C406	4030017460	S.CER ECJ0EB1E102K	B	75.1/18.9
C407	4030017460	S.CER ECJ0EB1E102K	B	75.1/18
C408	4030017460	S.CER ECJ0EB1E102K	B	75.1/17.1
C409	4030017460	S.CER ECJ0EB1E102K	B	102.4/22.8
C410	4030017460	S.CER ECJ0EB1E102K	T	102.8/23.3
C411	4030017460	S.CER ECJ0EB1E102K	B	104.8/23.4
C412	4030017460	S.CER ECJ0EB1E102K	T	104.1/23.5
C413	4030017460	S.CER ECJ0EB1E102K	T	92.5/15.2
C414	4030017460	S.CER ECJ0EB1E102K	B	112/22.4
C415	4030017460	S.CER ECJ0EB1E102K	T	112/23.3
C416	4030017460	S.CER ECJ0EB1E102K	B	110.3/23.3
C417	4030017460	S.CER ECJ0EB1E102K	T	112/22.4
C418	4030017460	S.CER ECJ0EB1E102K	B	106.5/39
C420	4030017420	S.CER ECJ0EC1H470J	B	25.9/31
C429	4030006860	S.CER C1608 JB 1H 102K-T	T	26.6/16.1
C430	4550007200	S.TAN F930J476MBABMA [EUR], [UK], [CHN] only	T	99.3/5.2
C431	4030017460	S.CER ECJ0EB1E102K	B	103.4/34.9
J1	6450000870	CNR HEC2711-01-020		
J2	6450001680	CNR HSJ1122-010010		
J4	6510021901	S.CNR BM02B-ASRS-TF (LF) (SN)	T	113.5/33.6
J5	6450001060	CNR HSJ1493-01-010		
J6	6510024560	S.CNR AXK5S40245P	T	68/36.2
S1	2260002840	SW SKHLLFA010		
S2	2260002840	SW SKHLLFA010		
EP2	6910014640	S.BEA MPZ2012S221A-T	T	32.6/18.4
EP3	6910014640	S.BEA MPZ2012S221A-T	B	104.7/40.3
EP4	6910014640	S.BEA MPZ2012S221A-T	T	8.9/13.4
EP5	6910014730	S.BEA MPZ2012S331A-T	B	26.8/33
EP6	6910014730	S.BEA MPZ2012S331A-T	B	21.8/31.9
EP7	6910014730	S.BEA MPZ2012S331A-T	B	23.5/31.6
EP8	6910014730	S.BEA MPZ2012S331A-T	B	39.9/35.8
EP10	6910014730	S.BEA MPZ2012S331A-T	B	32.9/31.1
EP11	6910014730	S.BEA MPZ2012S331A-T	B	29.4/33
EP13	6910015370	S.BEA ACZ1005Y-102-T	T	77.9/20.6
EP14	6910015370	S.BEA ACZ1005Y-102-T	T	85.3/18.1
EP15	6910014690	S.BEA MPZ1608S221A-T	B	103/39.9
EP16	6910014640	S.BEA MPZ2012S221A-T	T	25.4/18.3

M.=Mounted side (T: Mounted on the Top side, B: Mounted on the Bottom side)
S.=Surface mount

SECTION 7 MECHANICAL PARTS

[CHASSIS PARTS]

REF NO.	ORDER NO.	DESCRIPTION	QTY.
J1	6510022460	BNC-R162	1
SP1	2510001092	036D0801B	1
W1	8900009640	OPC-963	1
MP1	8210020970	2791 FRONT PANEL-1 (Incl. MP7, MP8, MP9, MP10) [A24]	1
	8210021211	2791 FRONT PANEL (B)-1 (Incl. MP7, MP8, MP9, MP10) [A24E]	1
	8210021200	2791 FRONT PANEL (A)-1 (Incl. MP7, MP8, MP9, MP10) [A6]	1
	8210021221	2791 FRONT PANEL (C)-1 (Incl. MP7, MP8, MP9, MP10) [A6E]	1
	8210023440	2791 FRONT PANEL (D)-1 (Incl. MP7, MP8, MP9, MP10) [AUS]	1
MP2	8010019701	2791 CHASSIS-1	1
MP3	8930063570	2791 MAIN SEAL	1
MP4	8930063760	2791 KEY [A24]	1
	8930064090	2791 KEY (B) [A24E]	1
	8930064010	2791 KEY (A) [A6]	1
	8930064080	2791 KEY (C) [A6E], [AUS]	1
MP5	8930063740	2791 JACK CAP	1
MP6	8930063750	2791 DC CAP	1
MP7	8930063730	2791 PTT BUTTON	1
MP8	8210020890	2791 PTT PANEL	1
MP9	8930063770	2791 PTT RUBBER	1
MP10	8930011900	Speaker net (A) (FX-573)	1
MP11	8930054680	2458 RELEASE BUTTON	1
MP12	8930053680	Push spring (AG)	1
MP13	8930064050	2791 PLUS TERMINAL	1
MP14	8210017091	2337 TERMINAL HOLDER-1	1
MP15	8930050840	2251 MINUS TERMINAL	1
MP16	8930063810	2791 SIDE PLATE	1
MP19	8610011930	Knob N-318 (Incl. MP21)	1
MP20	8610012120	Knob N-322 (Incl. MP28)	1
MP21	8610007510	Knob spring NO.7800	1
MP22	8830001340	1903 HEX NUT	2
MP23	8830001250	ANT CONNECTOR-101	1
MP24	8930052840	2337 T-RUBBER	1
MP25	8310062150	2791 WINDOW PLATE	1
MP26	8930064060	2791 WINDOW SHEET	1
MP27	8930042350	1922 MIC SHEET	1
MP28	8610009240	Knob spring NO.7800P	1
MP30	8850001880	Sealing washer (W) except [A24E], [A6E]	2
MP31	8930065090	2791 PET SHEET	1
MP32	8930065140	2791 MIC SPONGE	1
MP33	8860001350	2791 EARTH PLATE	1
MP35	8810009561	Screw BT B0 2X6 NI-ZK3 (BT)	2
MP36	8810009511	Screw BT B0 2X4 NI-ZC3 (BT)	13
MP37	8810004861	Screw PH M2X6 ZK3	2
MP38	8810009181	0tap 1flat washer B0 2X5 NI-ZC3 (BT)	1
MP39	8810010191	Screw BiH M2X4 SUS SSBC	1
MP41	8930065490	RUBBER SHEET (BO)	1
MP42*	8510017010	2791 SHIELD COVER [A24E], [A6E] only	1
MP43*	8930066260	FERRITE SHEET (N) [A24E], [A6E] only	1
MP44*	8930061731	SPONGE (HI)-1 [A24E], [A6E] only	1

[LOGIC UNIT]

REF NO.	ORDER NO.	DESCRIPTION	QTY.
J1*	6510020120	AXK6S40545P	1
DS1	5030002700	A0280	1
MC1	7700002310	EM-140	1
S1	7600000210	TP70N00E2015F-1903	1
EP2	8930063550	SRCN-2791-SP-N-W	1
MP1	8930063520	2791 LCD HOLDER	1
MP2	8210020900	2791 REFLECTOR	1
MP3	8930064980	2791 LCD FILTER	1

[RF UNIT]

REF NO.	ORDER NO.	DESCRIPTION	QTY.
J1	6450000870	HEC2711-01-020	1
J2	6450001680	HSJ1122-010010	1
J4	6510021901	BM02B-ASRS-TF (LF) (SN)	1
J5	6450001060	HSJ1493-01-010	1
J6	6510024560	AXK5S40245P	1
S1	2260002840	SKHLLFA010	1
S2	2260002840	SKHLLFA010	1
MP1*	8410002560	2791 PA HEATSINK	1
MP2	8950005320	2337 CONTACT	1
MP3*	8510016530	2791 VCO CASE	1
MP4	8510016520	2791 VCO COVER	1
MP5	8510016831	2791 RF COVER-1	1
MP6	8510016840	2791 RF-A COVER	1
MP7	8510016850	2791 RF-B COVER	1
MP8	8510016860	2791 RF-C COVER	1
MP9	8930004081	earth spring (B)-1	1

[ACCESSORIES]

REF NO.	ORDER NO.	DESCRIPTION	QTY.
W1†	–	OPC-499 [A24 USA], [A24 EUR], [A24 UK], [A6 USA] only	1
EP1	3310002130	FA-B02AR	1
EP2†	–	BP-210N EXP-RECYCLE except [USA-1]	1
	–	BP-208N [USA-1]	1
EP3†	–	BC-110AR [USA]	1
	–	BC-110DR ROHS [GEN], [EUR], [CHN], [EUR]	1
	–	BC-110V [AUS]	1
MP1†	–	MB-103	1
MP2	8010018080	Strap HK-009	1
ZP1†	–	LC-159 [USA], [USA-2], [EUR], [UK] only	1

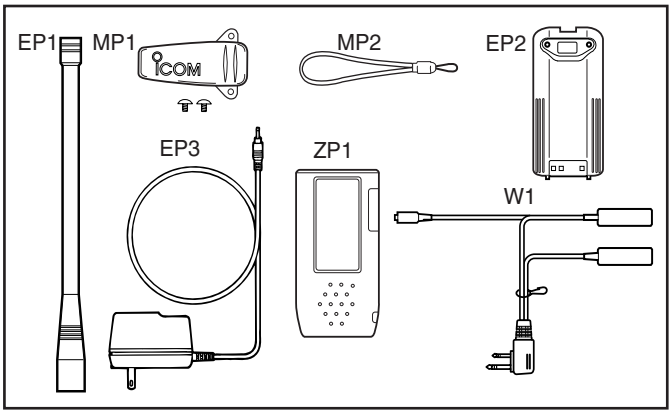

*: Refer to SECTION 9 “BOARD LAYOUTS.”
†: Optional product

Screw abbreviations A, B0, BT: Self-tapping PH: Pan head ZK: Black NI-ZU: Nickel-Zinc SUS: Stainless

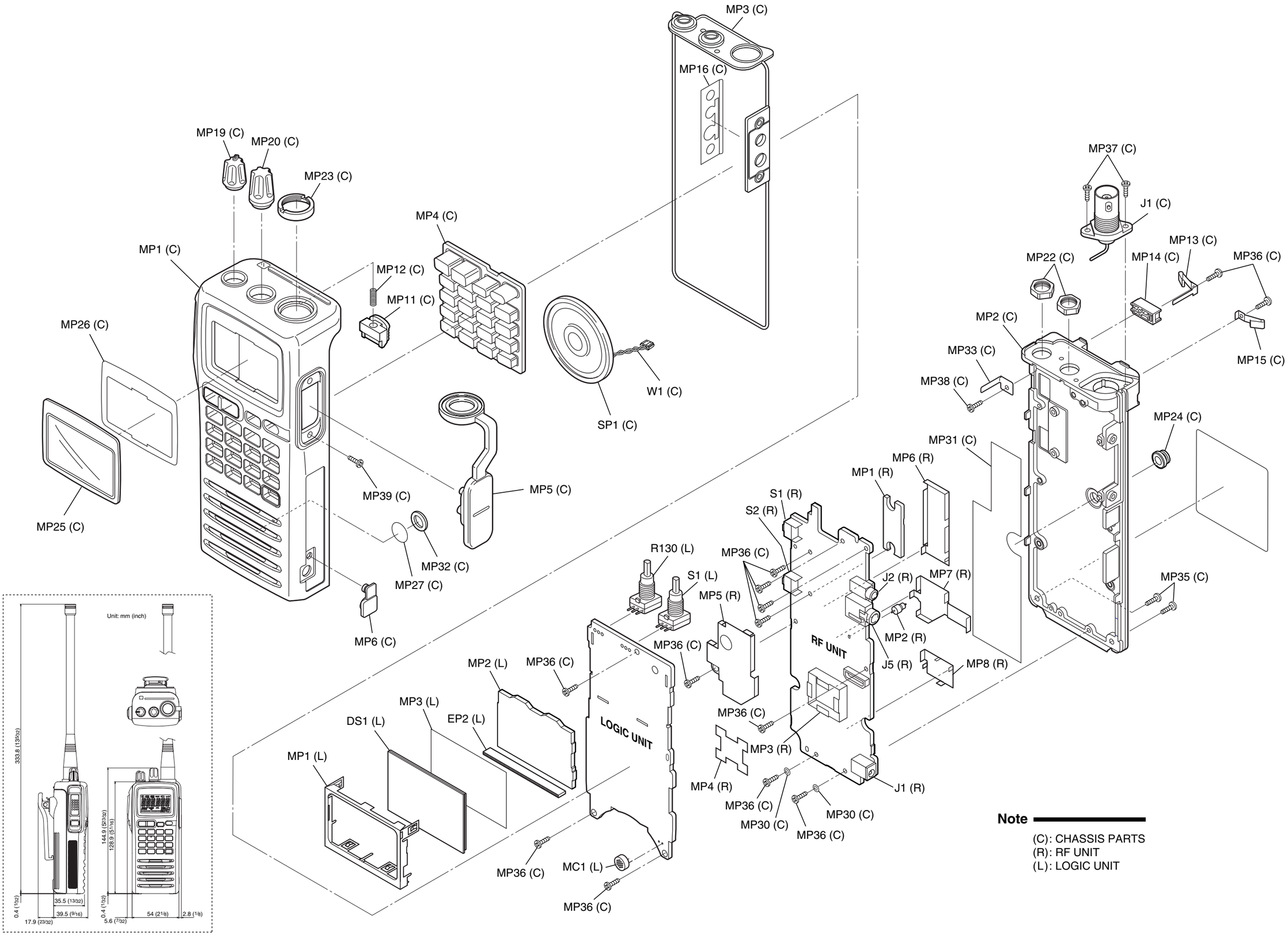

Note

(C): CHASSIS PARTS
(R): RF UNIT
(L): LOGIC UNIT

SECTION 8 SEMICONDUCTOR INFORMATION

• TRANSISTERS AND FETs

2SA1586 GR (Symbol: SG) 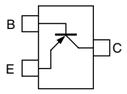	**2SA1588 GR** (Symbol: ZG) 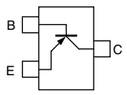	**2SB1132 T100 R** (Symbol: BAR) 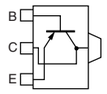	**2SB1182 TL Q** (Symbol: None) 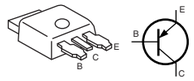	**2SB1201 S** (Symbol: B1201) 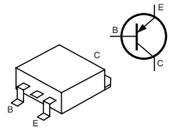
2SC3357 T1 RF (Symbol: RF) 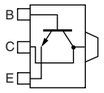	**2SC4116 BL** (Symbol: LL) 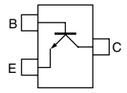	**2SC4211 6 TL** (Symbol: L6) 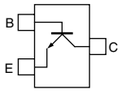	**2SC4215 O** (Symbol: QO) 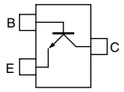	**2SC4226 T1 R25** (Symbol: R25) 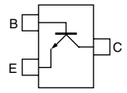
2SC4403 3 TL (Symbol: LY3) 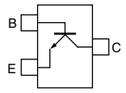	**2SC4617 TLS** (Symbol: BS) 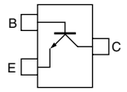	**2SD1819 A R** (Symbol: LG) 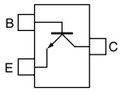	**2SK880 Y** (Symbol: XY) 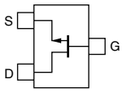	**3SK293** (Symbol: UF) 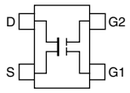
3SK299 T1 U73 (Symbol: U73) 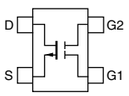	**HAT1024R** (Symbol: 4B3) 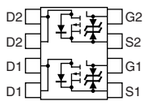	**RD01MUS1** (Symbol: K2) 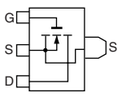	**RD12MVS1 T12** (Symbol: RD12MVS1) 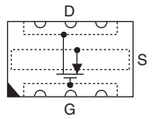 (top view)	**UNR9110J** (Symbol: 6L) 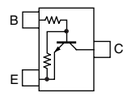
UNR9115J (Symbol: 6E) 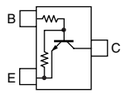	**UNR9210J** (Symbol: 8L) 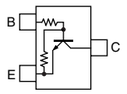	**UNR9211J** (Symbol: 8A) 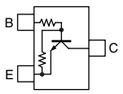	**UNR9213J** (Symbol: 8C) 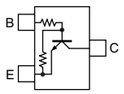	**UNR9215J** (Symbol: 8E) 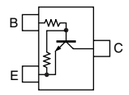
XP1113 (Symbol: 7L) 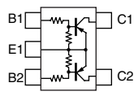	**XP1401 AB** (Symbol: 5V) 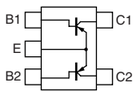	**XP1501 AB** (Symbol: 5R) 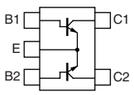	**XP4315** (Symbol: CB) 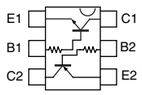	**XP4601** (Symbol: 5C) 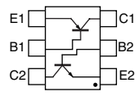

• DIODES

1SS400 (Symbol: A) 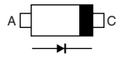	**1SV246** (Symbol: CV) 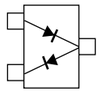	**1SV271** (Symbol: TG) 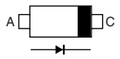	**HVC350B** (Symbol: B0) 	**HVU131TRF** (Symbol: P1)
MA77 (Symbol: 4B) 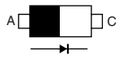	**MA111** (Symbol: 1B) 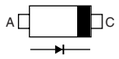	**MA133** (Symbol: MP) 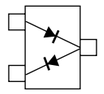	**MA728** (Symbol: 2A) 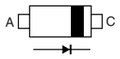	**MA785** (Symbol: 2E)
MA2S077 (Symbol: S) 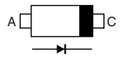	**MA2S111** (Symbol: A) 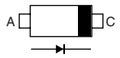	**MA2S728** (Symbol: B) 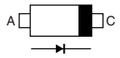	**MA2S30400 L** (Symbol: K) 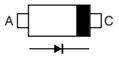	**MA6S121** (Symbol: M2D) 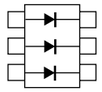
MA8051 M (Symbol: 5-1) 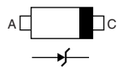	**MA8082 M** (Symbol: 8-2) 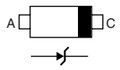	**RB060L 40** (Symbol: 36) 	**SB07-03C** (Symbol: J) 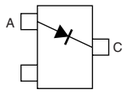	

• **LOGIC UNIT (TOP VIEW)**

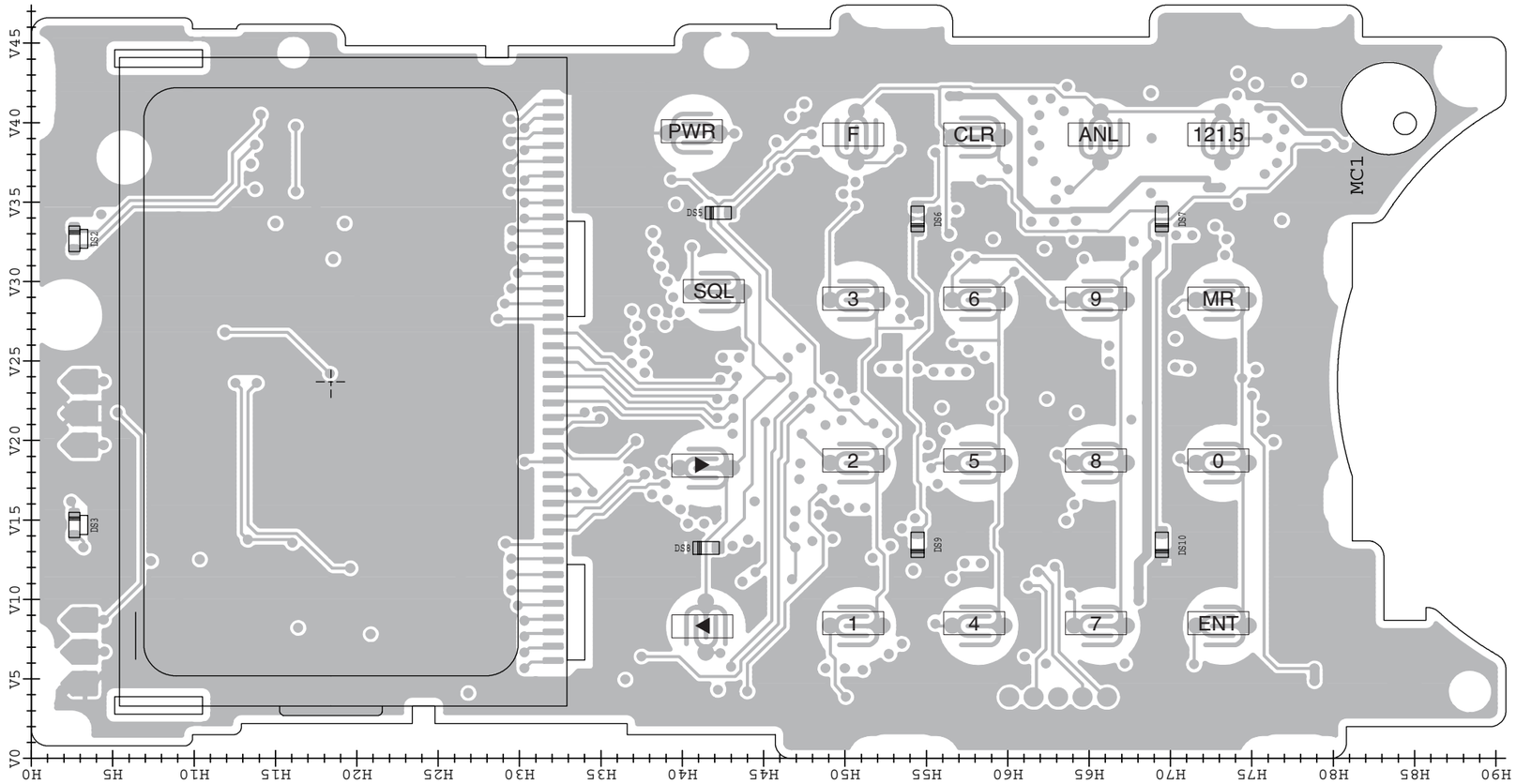

• LOGIC UNIT (BOTTOM VIEW)

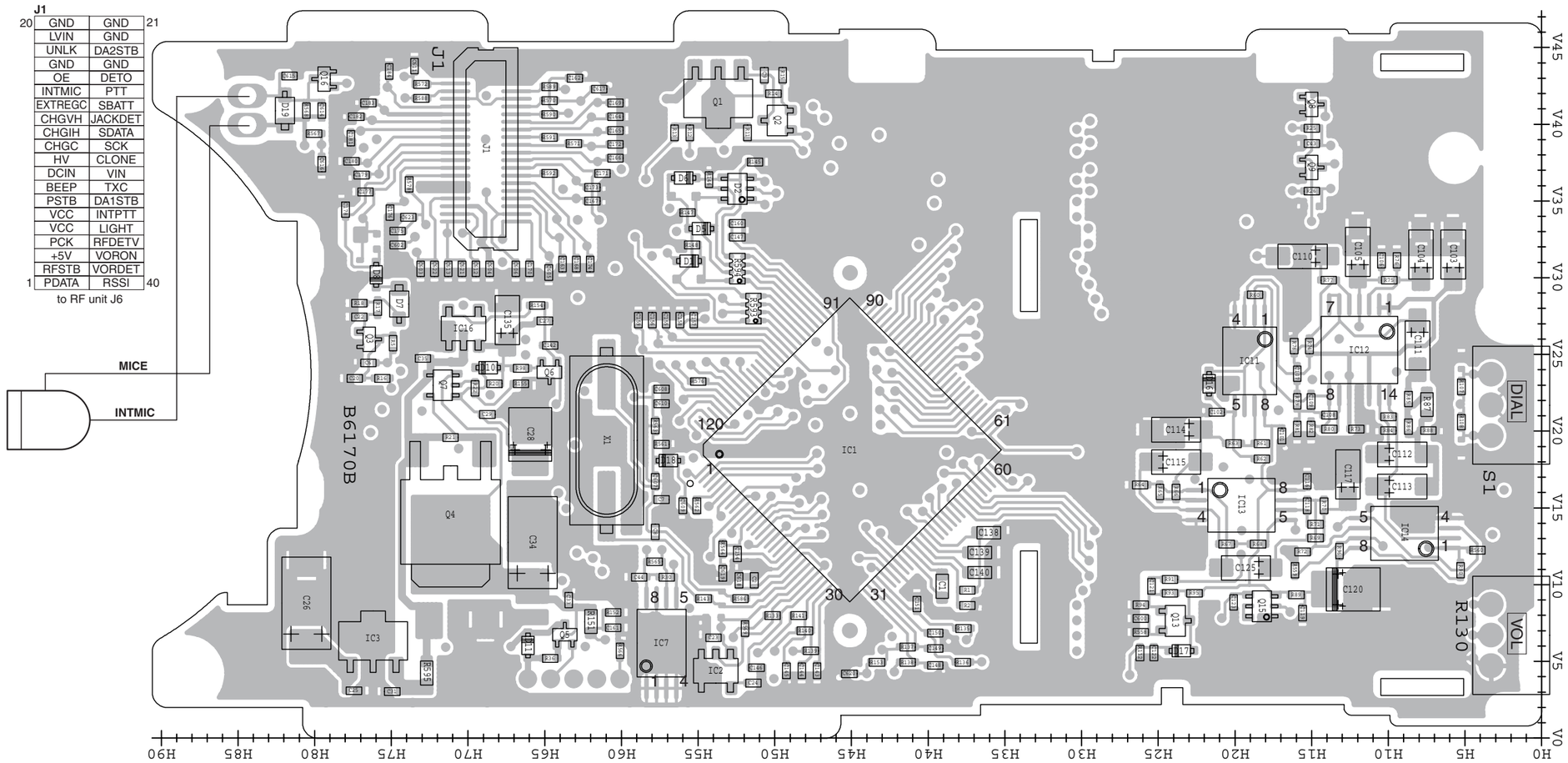

• RF UNIT (TOP VIEW)

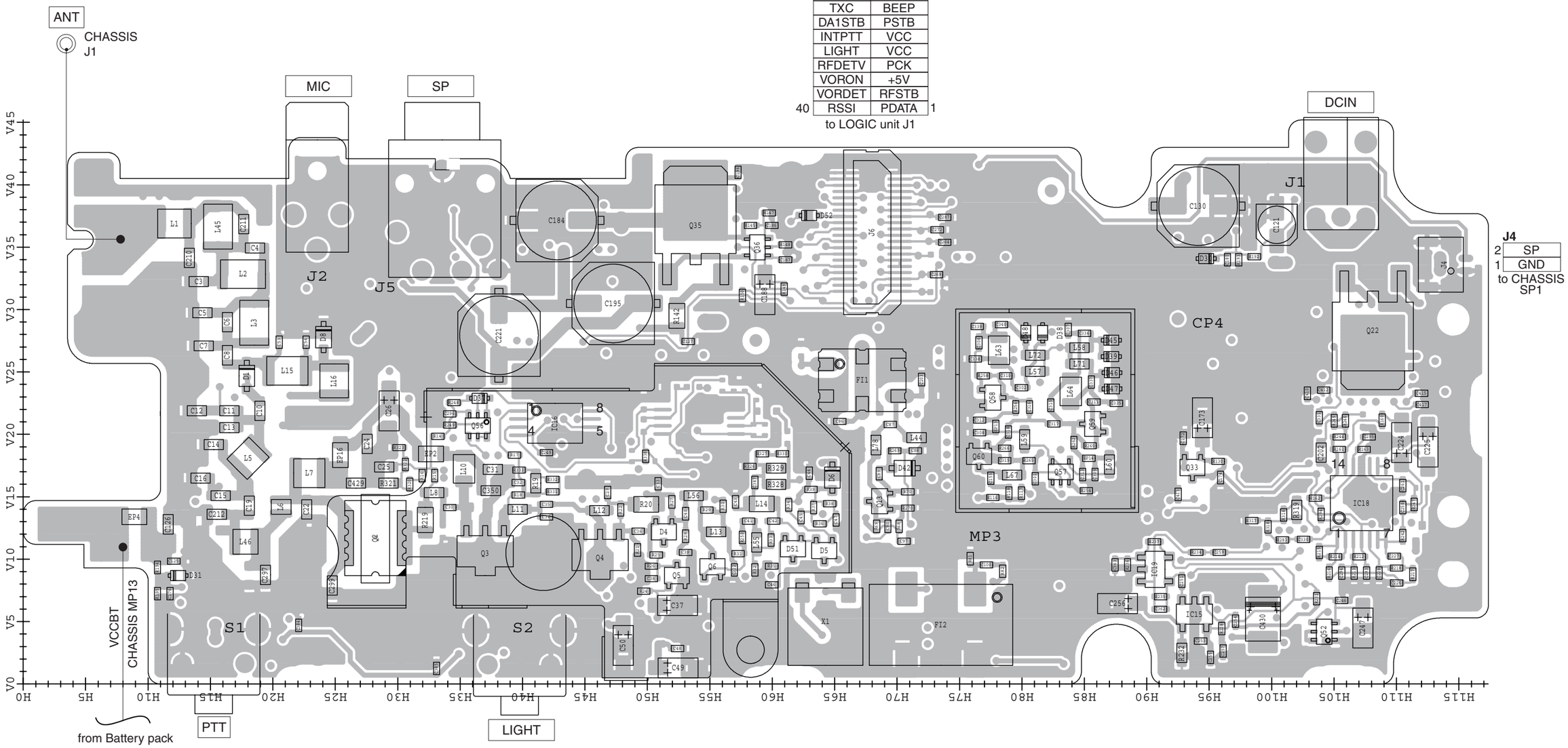

The combination of this side and the bottom side shows the board layout in the same configuration as the actual P.C.Board.

• RF UNIT (BOTTOM VIEW)

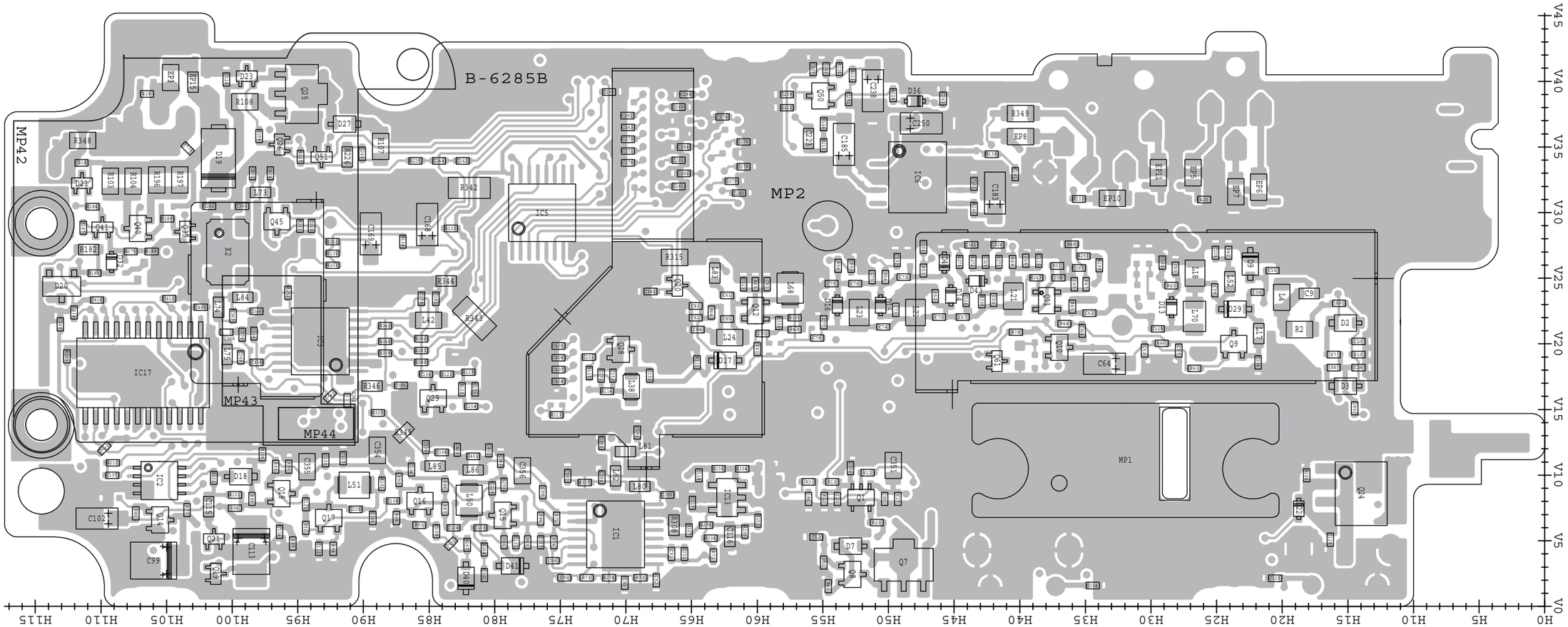

SECTION 10 BLOCK DIAGRAM

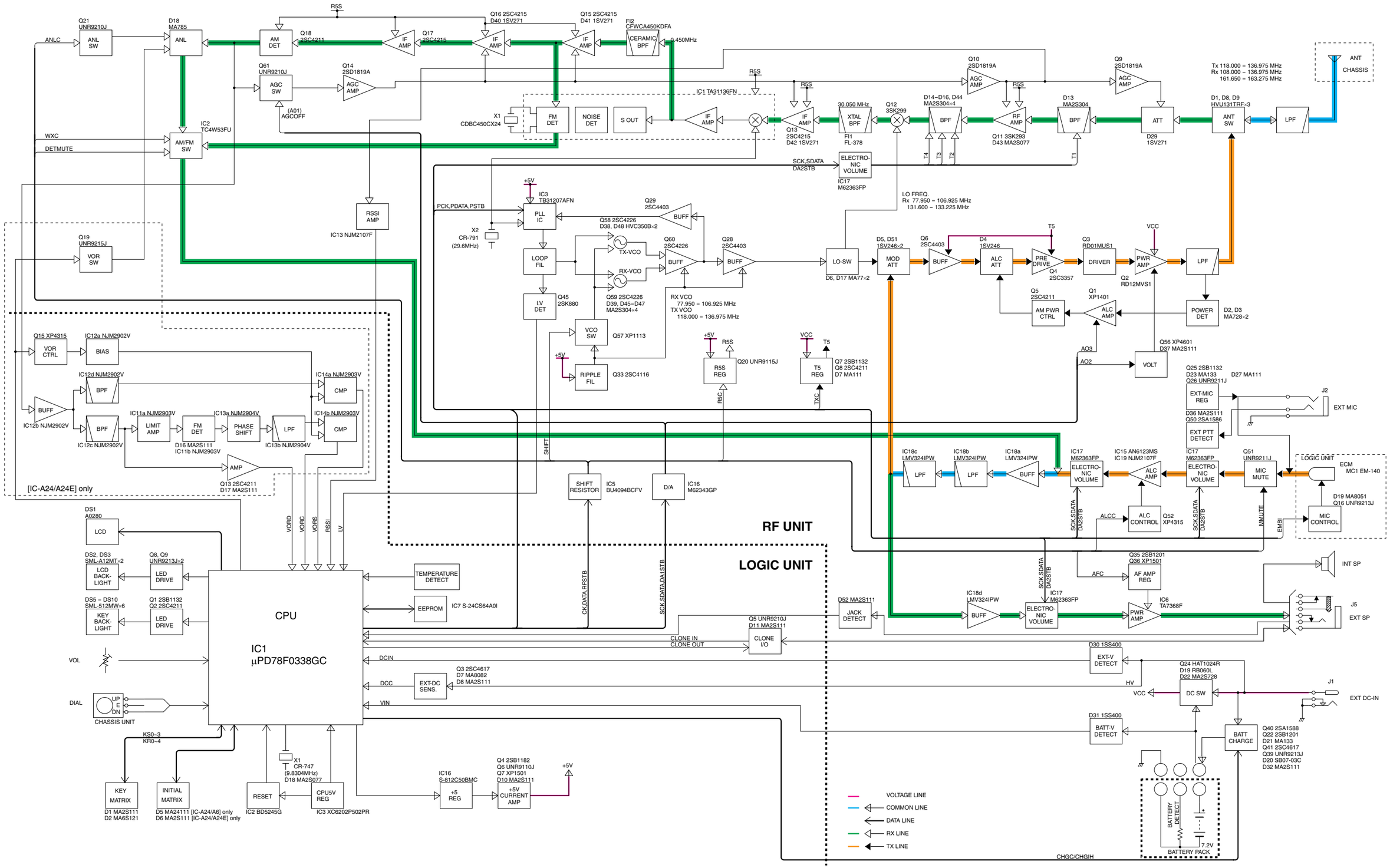

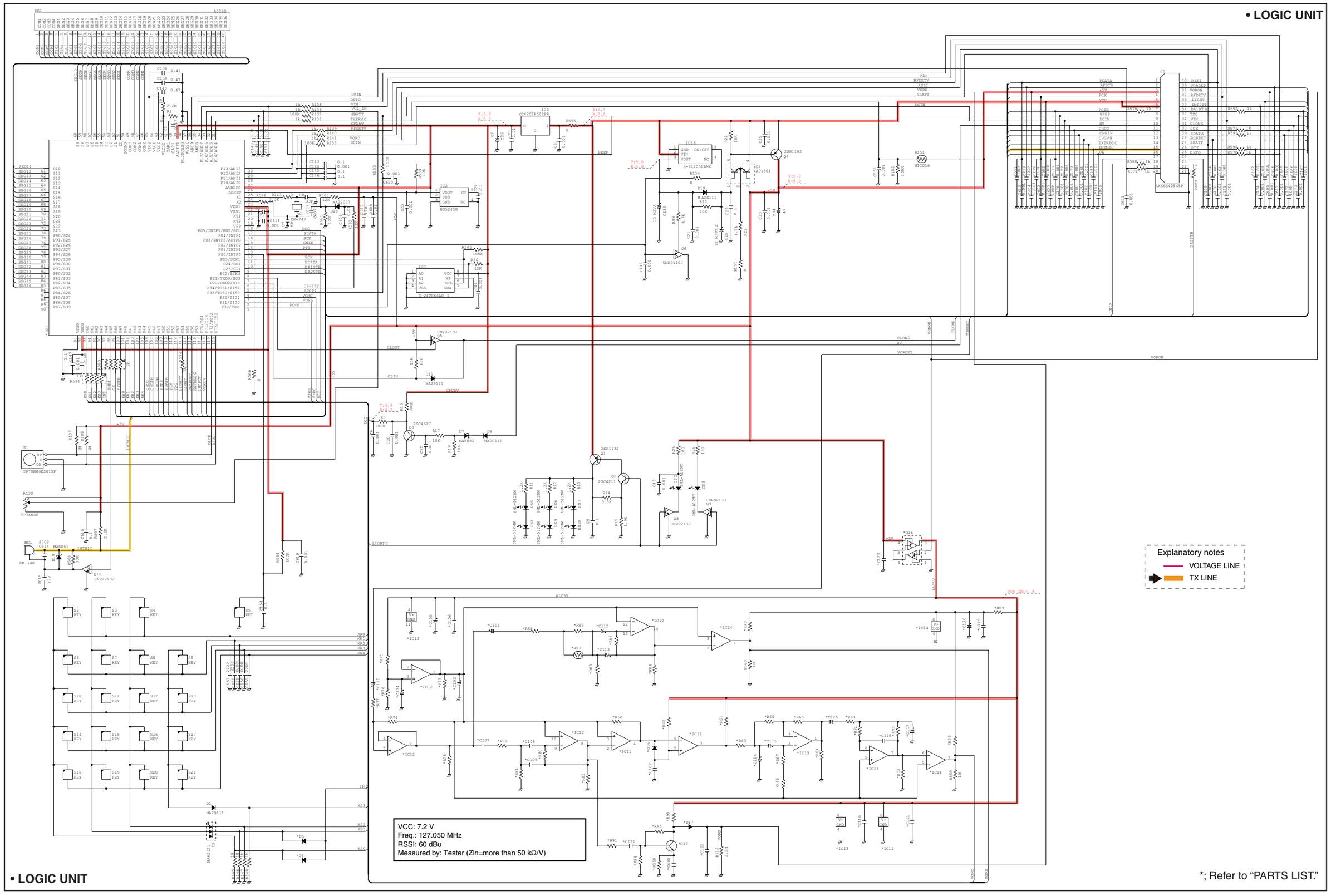
• LOGIC UNIT
Explanatory notes
VOLTAGE LINE
TX LINE
VCC: 7.2 V
Freq.: 127.050 MHz
RSSI: 60 dBu
Measured by: Tester (Zin=more than 50 kΩ/V)
*; Refer to "PARTS LIST."
• LOGIC UNIT

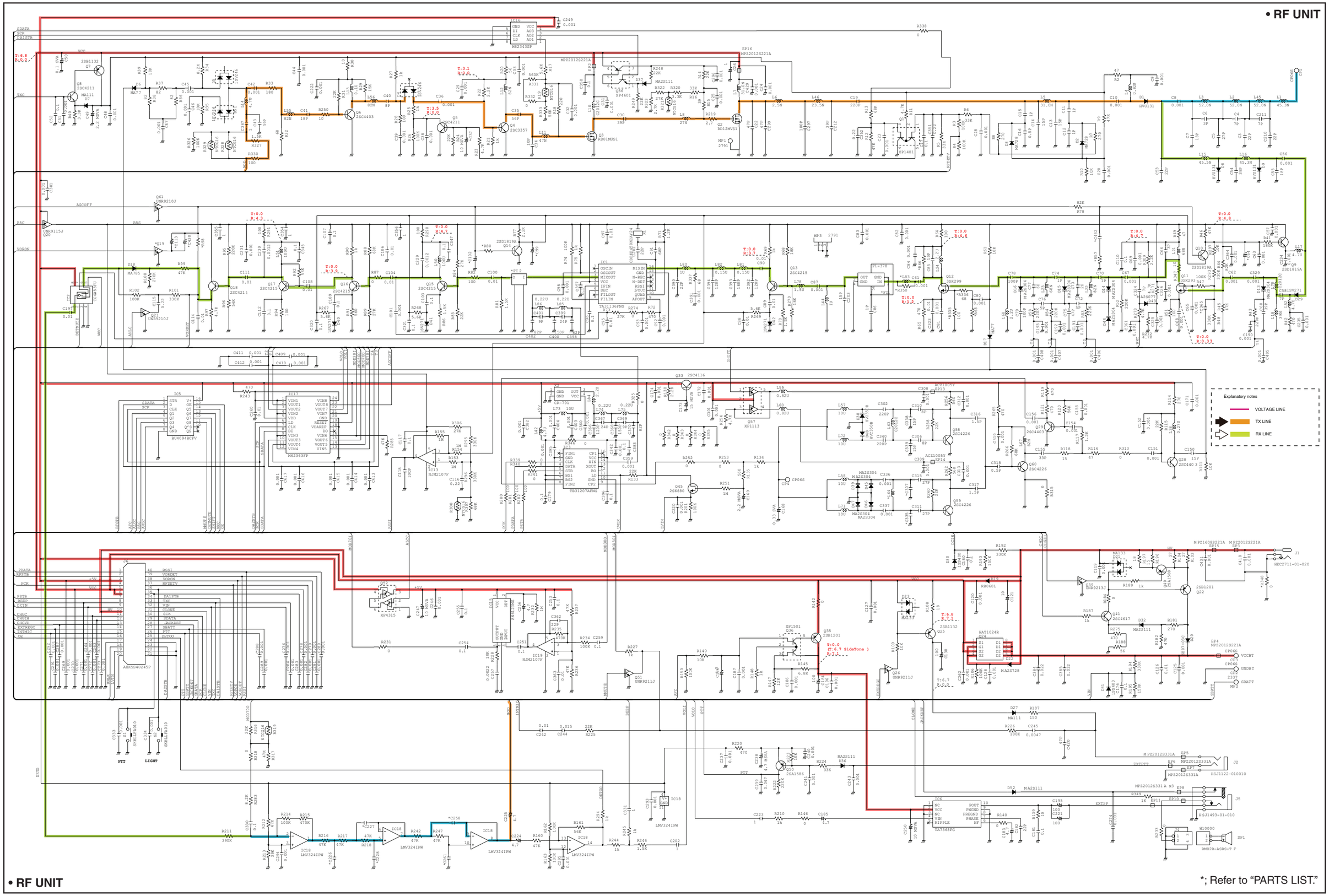

*; Refer to "PARTS LIST."

Icom Inc.

1-1-32, Kamiminami, Hirano-ku, Osaka 547-0003, Japan
Phone : +81 (06) 6793 5302
Fax : +81 (06) 6793 0013
URL : http://www.icom.co.jp/world/index.html

Icom America Inc.

<Corporate Headquarters>
2380 116th Avenue N.E., Bellevue, WA 98004, U.S.A.
Phone : +1 (425) 454-8155 Fax : +1 (425) 454-1509
URL : http://www.icomamerica.com
E-mail : sales@icomamerica.com
<Customer Service>
Phone : +1 (425) 454-7619

Icom Canada

Glenwood Centre #150-6165
Highway 17 Delta, B.C., V4K 5B8, Canada
Phone : +1 (604) 952-4266 Fax : +1 (604) 952-0090
URL : http://www.icomcanada.com
E-mail : info@icomcanada.com

Icom (Australia) Pty. Ltd.

Unit 1 / 103 Garden Road, Clayton VIC 3168 Australia
Phone : +61 (03) 9549-7500 Fax : +61 (03) 9549-7505
URL : http://www.icom.net.au
E-mail : sales@icom.net.au

Icom New Zealand

146A Harris Road, East Tamaki,
Auckland, New Zealand
Phone : +64 (09) 274 4062 Fax : +64 (09) 274 4708
URL : http://www.icom.co.nz
E-mail : inquiries@icom.co.nz

Beijing Icom Ltd.

10C07, Long silver Mansion, No.88, Yong Ding
Road, Haidian District, Beijing, 100039, China
Phone : +86 (010) 5889 5391/5392/5393
Fax : +86 (010) 5889 5395
E-mail : bjicom@bjicom.com
URL : http://www.bjicom.com

Icom (Europe) GmbH

Communication Equipment
Himmelgeister Str. 100, D-40225 Düsseldorf, Germany
Phone : +49 (0211) 346047 Fax : +49 (0211) 333639
URL : http://www.icomeurope.com
E-mail : info@icomeurope.com

Icom Spain S.L

Ctra. Rubi, 88, 08190, Sant Cugat del Valles, Barcelona, SPAIN
Phone : +34 (93) 590 26 70 Fax : +34 (93) 589 04 46
URL : http://www.icomspain.com
E-mail : icom@icomspain.com

Icom (UK) Ltd.

Unit 9, Sea St., Herne Bay, Kent, CT6 8LD, U.K.
Phone : +44 (01227) 741741 Fax : +44 (01227) 741742
URL : http://www.icomuk.co.uk
E-mail : info@icomuk.co.uk

Icom France s.a.s.

Zac de la Plaine
1 Rue Brindejonc des Moulinais BP 5804
31505 Toulouse Cedex, France
Phone : +33 (5) 61 36 03 03 Fax : +33 (5) 61 36 03 00
URL : http://www.icom-france.com
E-mail : icom@icom-france.com

Asia Icom Inc.

6F No.68, Sec. 1 Cheng-Teh Road, Taipei, Taiwan, R.O.C.
Phone : +886 (02) 2559 1899 Fax : +886 (02) 2559 1874
URL : http://www.asia-icom.com
E-mail : sales@asia-icom.com

Icom Polska

Sopot, 3 Maja 54 Poland
Phone : +48 (58) 550 7135 Fax : +48 (58) 551 0484
E-mail : icompolska@icompolska.com.pl

Count on us!

Icom Inc.
1-1-32, Kamiminami, Hirano-ku, Osaka 547-0003, Japan

S-14115HZ-C1-①
© 2004–2007 Icom Inc.